British Standard

BRITISH STANDARD

BS EN 12056-3:2000

Gravity drainage systems inside buildings —

Part 3: Roof drainage, layout and calculation

The European Standard EN 12056-3:2000 has the status of a British Standard

ICS 91.060.20; 91.140.80

National foreword

This British Standard is the official English language version of EN 12056-3:2000. It supersedes BS 6367:1983 which is withdrawn.

The UK participation in its preparation was entrusted by Technical Committee B/505, Wastewater engineering, to Subcommittee B/505/21, Roof drainage and sanitary pipework, which has the responsibility to:

— aid enquirers to understand the text;

— present to the responsible European committee any enquiries on the interpretation, or proposals for change, and keep the UK interests informed;

— monitor related international and European developments and promulgate them in the UK.

A list of organizations represented on this subcommittee can be obtained on request to its secretary.

The national annexes are an informative element of this standard and contain information provided to support easier implementation of EN 12056-3:2000 in the United Kingdom, within the framework envisaged by the scope of that standard. They therefore constitute a revision of those parts of BS 6367:1983 that are not otherwise superseded by BS EN 12056-3:2000. However, users are reminded that only the normative elements of the adopted European Standard set out the provisions to which it is necessary to conform in order to form part of a trade description when citing this British Standard by number or when compliance with it is claimed.

Cross-references

The British Standards which implement international or European publications referred to in this document may be found in the BSI Standards Catalogue under the section entitled “International Standards Correspondence Index”, or by using the “Find” facility of the BSI Standards Electronic Catalogue.

A British Standard does not purport to include all the necessary provisions of a contract. Users of British Standards are responsible for their correct application.

Additional information

It is recognized that Figure 2, Figure 3, Figure 4 and Figure 11, along with the logic diagrams contained in annex D, are of poor quality. This has been reported to CEN in a proposal to correct them in the Engish language version of EN 12056-3:2000. Until the standard is corrected, which BSI is not authorized to do, it is strongly recommended that these figures be used with care.

Textual errors

The textual errors set out below were discovered when the English language version of EN 12056-3:2000 was adopted as the national standard. They have been reported to CEN in a proposal to amend the text of the European Standard.

– Note 1 to Figure 8 should refer to Table 8, rather than Table 7.

– Note 3 to Figure 8 should refer to Table 8, rather than Table 7.

Compliance with a British Standard does not of itself confer immunity from legal obligations.

Summary of pages

This document comprises a front cover, an inside front cover, the EN title page, pages 2 to 83 and a back cover.

The BSI copyright notice displayed in this document indicates when the document was last issued.

This British Standard, having been prepared under the direction of the Sector Committee for Building and Civil Engineering, was published under the authority of the Standards Committee and comes into effect on 15 September 2000

Amendments issued since publication

Amd. No.	Date	Comments

ISBN 0 580 36486 0

EUROPEAN STANDARD
NORME EUROPÉENNE
EUROPÄISCHE NORM

EN 12056-3

June 2000

ICS 91.060.20; 91.140.80

English version

Gravity drainage systems inside buildings - Part 3: Roof drainage, layout and calculation

Réseaux d'évacuation gravitaire à l'intérieur des bâtiments - Partie 3: Système d'évacuation des eaux pluviales, conception et calculs

Schwerkraftentwässerungsanlagen innerhalb von Gebäuden - Teil 3: Dachentwässerung, Planung und Bemessung

This European Standard was approved by CEN on 27 October 1999.

CEN members are bound to comply with the CEN/CENELEC Internal Regulations which stipulate the conditions for giving this European Standard the status of a national standard without any alteration. Up-to-date lists and bibliographical references concerning such national standards may be obtained on application to the Central Secretariat or to any CEN member.

This European Standard exists in three official versions (English, French, German). A version in any other language made by translation under the responsibility of a CEN member into its own language and notified to the Central Secretariat has the same status as the official versions.

CEN members are the national standards bodies of Austria, Belgium, Czech Republic, Denmark, Finland, France, Germany, Greece, Iceland, Ireland, Italy, Luxembourg, Netherlands, Norway, Portugal, Spain, Sweden, Switzerland and United Kingdom.

EUROPEAN COMMITTEE FOR STANDARDIZATION
COMITÉ EUROPÉEN DE NORMALISATION
EUROPÄISCHES KOMITEE FÜR NORMUNG

Central Secretariat: rue de Stassart, 36 B-1050 Brussels

Ref. No. EN 12056-3:2000 E

Contents

Page

Foreword **3**

1 Scope **4**

2 Normative references **5**

3 Definitions and symbols **6**
3.1 Definitions 6
3.2 Symbols 7

4 Runoff calculations **8**
4.1 Quantity of rainwater runoff 8
4.2 Rainfall intensity, *r* 9
4.3 Effective roof area, *A* 10

5 Hydraulic design **11**
5.1 Eaves gutters 11
5.2 Valley and parapet gutters 14
5.3 Gutter outlets 19
5.4 Flat roof outlets 21

6 Rainwater pipes **26**
6.1 Part filled (non-siphonic systems) 26
6.2 Siphonic systems 27
6.3 Drains 28
6.4 Connection to sanitary pipework 28

7 Layout **29**
7.1 General 29
7.2 Gutters 29
7.3 Outlets 29
7.4 Emergency outlets 29
7.5 Access 29
7.6 Pipework 29
7.7 Trace heating 30
7.8 Change of building use 30

ANNEX A (NORMATIVE) TESTING OF GUTTERS AND OUTLETS **31**
A.1 Capacity of gutter and outlet in combination 31
A.2 Capacity of gutter 32
A.3 Capacity of gutter outlet 32

ANNEX B (INFORMATIVE) NATIONAL AND LOCAL REGULATIONS AND PRACTICE **33**

ANNEX C (INFORMATIVE) CAPACITY OF DRAINS **38**

ANNEX D (INFORMATIVE) LOGIC DIAGRAMS **39**

Foreword

This European Standard has been prepared by Technical Committee CEN/TC 165 "Waste water engineering", the secretariat of which is held by DIN.

This European Standard shall be given the status of a national standard, either by publication of an identical text or by endorsement, at the latest by December 2000, and conflicting national standards shall be withdrawn at the latest by June 2001.

This part is the third in a series relating to the functional requirements of gravity drainage systems inside buildings. There will be five parts, as follows: Gravity drainage systems inside buildings

Part 1: General and performance requirements

Part 2: Sanitary pipework - Layout and calculation

Part 3: Roof drainage - Layout and calculation

Part 4: Waste water lifting plants - Layout and calculation

Part 5: Installation and testing, instructions for operation, maintenance and use

According to the CEN/CENELEC Internal Regulations, the national standards organizations of the following countries are bound to implement this European Standard: Austria, Belgium, Czech Republic, Denmark, Finland, France, Germany, Greece, Iceland, Ireland, Italy, Luxembourg, Netherlands, Norway, Portugal, Spain, Sweden, Switzerland and the United Kingdom.

1 Scope

This European Standard applies to wastewater drainage systems, which operate under gravity. It is applicable for drainage systems inside dwellings and commercial, institutional and industrial buildings.

This third part of this European Standard describes a method of calculating the hydraulic adequacy of non-siphonic roof drainage systems and gives performance requirements for siphonic roof drainage systems. It also sets standards for the layout and installation of roof drainage insofar as they affect flow capacity.

This part of this European Standard applies to all roof drainage systems where the outlets are large enough not to limit the flow capacity of the gutter (i.e. free discharge conditions). It applies to all materials used for roof drainage systems.

Detailed information additional to that contained in this Standard may be obtained by referring to the technical documents listed in Annex B.

2 Normative references

This European Standard incorporates by dated or undated reference, provisions from other publications. These normative references are cited at the appropriate places in the text and the publications are listed hereafter. For dated references, subsequent amendments to or revisions of any of these publications apply to this European Standard only when incorporated in it by amendment or revision. For undated references the latest edition of the publication referred to applies.

EN 12056-1:	Gravity drainage systems inside buildings Part 1: General and performance requirements
EN 12056-2:	Gravity drainage systems inside buildings Part 2: Sanitary pipework, layout and calculation
EN 12056-5	Gravity drainage systems inside buildings Part 5: Installation and testing, instructions for operation, maintenance and use

3 Definitions and symbols

3.1 Definitions

For the purposes of this European Standard, the following definitions apply:

3.1.1 **gutter angle**
deviation in gutter direction

3.1.2 **design water depth**
maximum depth of water under design rainfall conditions

3.1.3 **drainage length**
length of gutter from a stop end to an outlet or half the distance between adjacent outlets, in millimetres

3.1.4 **eaves gutter**
gutter where any spillover will discharge outside the building

3.1.5 **flat sole**
sole of the gutter, which is horizontal in cross-section for at least the width of the outlet

3.1.6 **freeboard**
total depth of gutter minus the designed water depth

3.1.7 **long gutter**
gutter whose drainage length is greater than 50 times its design water depth

3.1.8 **roof drainage of buildings**
all pipework and fittings outside and inside, fixed to or passing through the building structure, including drains below the building, to the point of connection to the buried drain adjacent to the building, used to remove precipitation from a roof (See Scope of EN 12056-1.)

3.1.9 **short gutter**
gutter whose drainage length is not greater than 50 times its design water depth

3.1.10 **siphonic drainage system**
drainage system in which the outlets and pipework enable the system to flow completely full under design conditions and make use of the total head available between the outlets and the discharge point

3.1.11 **spillover level**
level at which water will overflow the gutter

3.2 Symbols

For the purposes of this European Standard, the following symbols have been used:

Symbol	Description	Unit	Text reference
A	effective roof area	m^2	Table 3
A_E	full cross-sectional area of gutter	mm^2	5.1.2
A_W	cross-sectional area of the gutter below the freeboard	mm^2	5.2.3
A_O	plan area of a gutter outlet	mm^2	Figure 8
B_R	width of roof from gutter to ridge	m	Figure 1
C	runoff coefficient	dimensionless	4.1
d_i	internal diameter of pipe	mm	Table 8
D	effective diameter of a gutter outlet	mm	Figure 9
D_O	actual diameter of a gutter outlet	mm	Figure 9
f	filling degree of rainwater pipe which is equal to the proportion of cross-section of rainwater pipe filled with water	dimensionless	Table 8
F_d	depth factor	dimensionless	Figure 5
F_h	outlet head factor	dimensionless	Figure 10
F_L	capacity factor for long and sloping gutters	dimensionless	Table 6
F_s	shape factor	dimensionless	Figure 6
h	head at outlet	mm	Table 7
H_R	height of roof from gutter to ridge	m	Figure 1
h_d	water depth in drain	mm	annex C
i	pipe or gutter gradient	dimensionless	annex C
k_b	effective pipe roughness	mm	Table 8
k_O	outlet coefficient	dimensionless	Table 7
L	drainage length of gutter, i.e. length of gutter from a stop end to an outlet or half the distance between two adjacent outlets	mm	Table 6
L_R	length of roof to be drained	m	Figure 1
L_S	length of sump	mm	Figure 11
L_K	length of taper of a gutter outlet	mm	Figure 9
L_W	length of weir over which water can flow	mm	5.3.5 and Figure 12
Q	rate of flow of water	l/s	4.1
Q_d	drain capacity	l/s	annex C
Q_L	design capacity of "short" gutter, laid level	l/s	5.1.2
Q_N	nominal capacity of gutter	l/s	5.1.2
Q_O	total flow to an outlet (calculated on area drained multiplied by the rainfall intensity)	l/s	Table 7

Symbol	Description	Unit	Text reference
Q_{RWP}	capacity of a rainwater pipe	l/s	Table 8
Q_{SE}	capacity of an equivalent square eaves gutter	l/s	5.1.4 and Figure 3
Q_{SV}	capacity of an equivalent square valley or parapet gutter	l/s	5.2.3
R	is the radius of a gutter outlet	mm	Figure 9
r	rainfall intensity	$l/(s \cdot m^2)$	4.2
S	width of gutter at sole	mm	Figure 4
T	width of gutter at designated water line	mm	Figure 4
T_R	distance from gutter to ridge measured along the roof	m	Figure 1
P	wetted perimeter	mm	annex A
v	flow velocity	m/s	annex C
W	design water depth	mm	Figure 4
Z	total depth of gutter to spillover level, including freeboard	mm	Figure 4
ν	kinematic viscosity of water	m^2/s	annex C

4 Runoff calculations

4.1 Quantity of rainwater runoff

The rate of flow of rainwater to be drained away from a roof under steady state conditions shall be calculated from equation 1:

$$Q = r \cdot A \cdot C \tag{1}$$

where

Q is the rate of flow of water, in litres per second (l/s);
r is the rainfall intensity, in litres per second per square metre [$l/(s \cdot m^2)$];
A is the effective roof area, in square metres (m^2);
C is a runoff coefficient (taken as 1,0 unless national and local regulations and practice state otherwise), dimensionless.

4.2 Rainfall intensity, *r*

4.2.1 Where there is adequate statistical rainfall data related to the frequency of recurrence of storms of specific intensity and duration, the rainfall intensity, *r*, used in equation 1 shall be chosen with due regard to the nature and use of the building and appropriate to the degree of risk that can be accepted. Where statistical rainfall data is used, clause 4.2.2 shall not apply.

4.2.2 Where statistical rainfall data does not exist, a minimum rainfall intensity used as a basis for design shall be chosen from the intensities listed in Table 1, appropriate to the climate at the location of the building and in accordance with national and local regulations and practice. The minimum rainfall intensity shall be multiplied by a risk factor given in Table 2 to give the rainfall intensity, *r*, to be used in equation 1, unless national and local regulations and practice state otherwise.

Table 1 — Rainfall intensity rates

Rainfall intensity $l/(s \cdot m^2)$
0,010
0,015
0,020
0,025
0,030
0,040
0,050
0,060

Table 2 — Risk factors

Situation	**Risk factor**
Eaves gutters	1,0
Eaves gutters where water overflowing would cause particular inconvenience, e.g. over entrances to public buildings	1,5
Non-eaves gutters and in all other circumstances where abnormally heavy rain or blockage in the roof drainage system could cause water to spillover into the building	2,0
For non-eaves gutters in buildings where an exceptional degree of protection is necessary, e.g. - hospital operating theatres - critical communications facilities - storage for substances that give off toxic or flammable fumes when wet - buildings housing outstanding works of art	3,0

4.3 Effective roof area, *A*

4.3.1 No allowance shall be made for the effects of wind when calculating the effective roof area, unless national and local regulations and practice state otherwise.

4.3.2 Where no allowance is made for wind, the effective roof area shall be calculated from equation (2):

$$A = L_R \cdot B_R \qquad (2)$$

where

A is the effective roof area, in square metres (m²);
L_R is the length of roof to be drained (see Figure 1), in metres (m);
B_R is the width of roof from gutter to ridge (see Figure 1), in metres (m).

4.3.3 Where allowance is made for wind, the effective roof area shall be calculated in accordance with a method selected from Table 3.

4.3.4 In areas where wind is taken into account in rainfall calculations, where rain driven against a wall by the wind can run down onto the roof or into a gutter, 50% of the area of the wall shall be added to the effective area of the roof.

Table 3 — Effective impermeable roof area

Allowance to be made for the effect of wind	**Effective impermeable roof area, *A*** **m^2**
Wind driven rain, 26^o to vertical	$A = L_R \cdot \left(B_R + \frac{H_R}{2}\right)$
Rain perpendicular to roof (i.e. surface area of roof used)	$A = L_R \cdot T_R$

NOTES:
L_R is the length of roof to be drained, in metres (m);
B_R is the plan width of roof from gutter to ridge, in metres (m);
H_R is the height of roof from gutter to ridge, in metres (m);
T_R is the distance from gutter to ridge measured along the roof, in metres (m);
A is the effective impermeable roof area, in square metres (m²).

Figure 1 illustrates these dimensions.

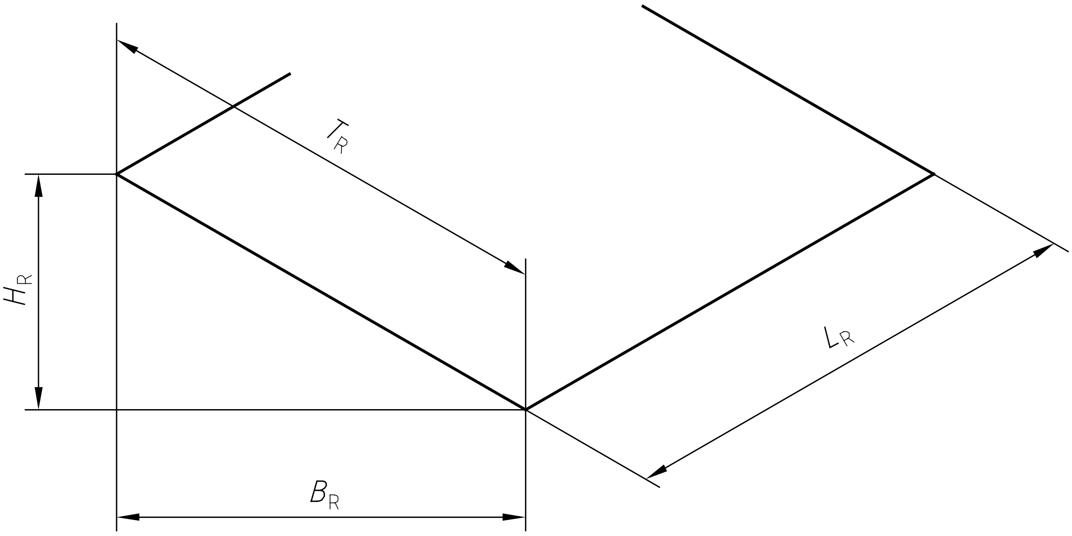

Figure 1 — Roof dimensions

5 Hydraulic design

5.1 Eaves gutters

5.1.1 Gutters may be laid level or to a gradient, unless stated otherwise by local or national regulation. A gutter laid to a nominal gradient of 3 mm/m or less (referred to as ”nominally level”) shall be designed as a level gutter.

5.1.2 For eaves gutters of semi-circular and similar shape, designed as level and with outlets capable of allowing free discharge, the capacity shall be calculated using its cross-sectional area and shape, from equation (3):

$$Q_L = 0{,}9 \cdot Q_N \qquad (3)$$

where

Q_L is the design capacity of "short" gutter, see 5.1.6, laid level, in litres per second (l/s);
0,9 is a factor of safety, dimensionless;
Q_N is the nominal capacity of the gutter, calculated as $2{,}78 \cdot 10^{-5} \cdot A_E^{1{,}25}$ or determined by test, in litres per second (l/s);
A_E is the full cross-sectional area of gutter, in square millimetres (mm²).

NOTE 1:
The full cross-sectional area of a gutter is the area of the cross-section below spillover level, as illustrated in Figure 2.

NOTE 2:
For convenience, the variation of Q_N with A_E is shown in Figure 3.

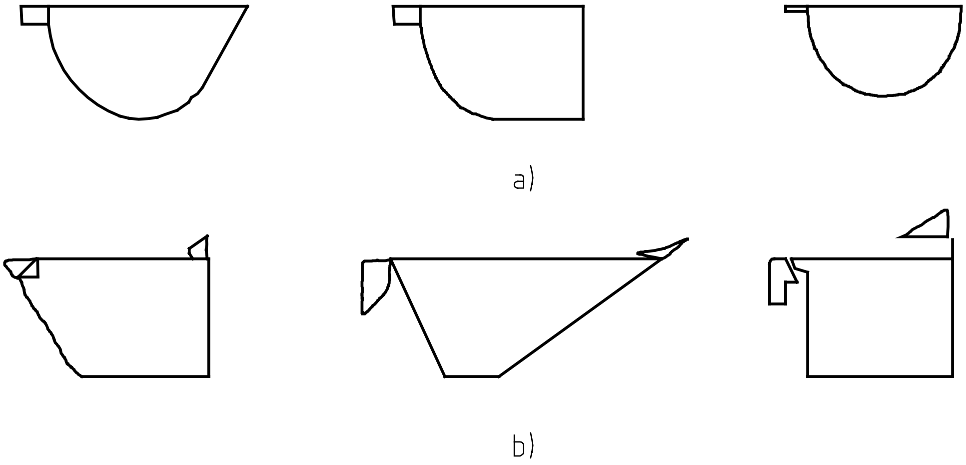

□ indicates full cross-sectional area

a) semi-circular and similar shape gutters

b) trapezoidal gutters

Figure 2 — Illustrations of full cross-sectional area of gutters

5.1.3 The capacity of a gutter of semi-circular or similar shape when tested in accordance with annex A may be substituted for calculated values of Q_N. Q_N determined by test shall be multiplied by a safety factor of 0,9 to give Q_L used for design purposes.

5.1.4 For eaves gutters of rectangular, trapezoidal and similar shapes (see Figure 4), designed as level and with outlets capable of allowing free discharge, the capacity shall be calculated from equation (4):

$$Q_L = 0{,}9 \cdot Q_N \qquad (4)$$

where

Q_L is the design capacity of "short" gutter, see 5.1.6, laid level, in litres per second (l/s);
0,9 is the factor of safety, dimensionless;
Q_N is the nominal capacity of the gutter, calculated as $Q_{SE} \cdot F_d \cdot F_s$ or determined by test, in litres per second (l/s);
Q_{SE} is the capacity of an equivalent square eaves gutter, calculated as $3{,}48 \times 10^{-5} \cdot A_E^{1{,}25}$, in litres per second (l/s);
A_E is the full cross-sectional area of gutter, in square millimetres (mm²);
F_d is the depth factor, determined from Figure 5, dimensionless;
F_s is the shape factor, determined from Figure 6, dimensionless.

NOTE 1:
The full cross-sectional area of a gutter is the area of the cross-section below spillover level, as illustrated in Figure 2.

NOTE 2:
For convenience, the variation of Q_{SE} with A_E is shown in Figure 3.

NOTE 3:
Figure 4 illustrates the shapes and dimensions of gutters to which Figures 5, 6, 7 and 10 apply.

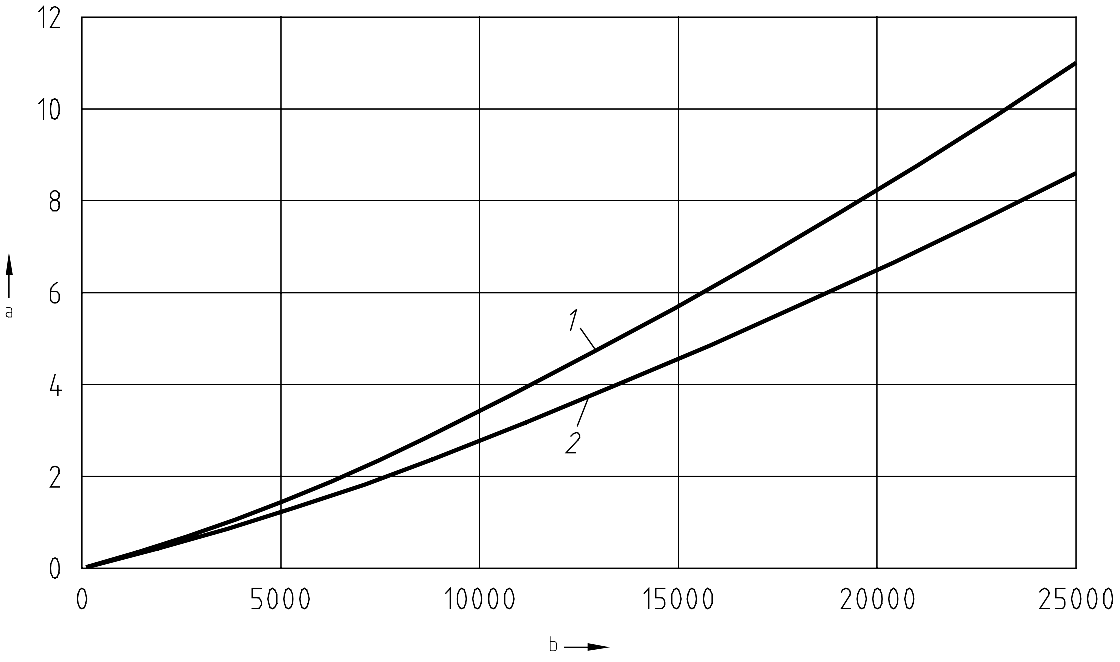

1 square gutter
2 semi-circular gutter

a Capacity Q_N or Q_{SE} in l/s
b Cross-sectional area A_E in mm²

Figure 3 — Capacity of eaves gutters

5.1.5 The capacity of a gutter of rectangular, trapezoidal and similar shapes when tested in accordance with annex A may be substituted for calculated values of Q_N. Q_N determined by test shall be multiplied by a safety factor of 0,9 to give Q_L used for design purposes.

5.1.6 A gutter shall be considered to be hydraulically "short" if its length, L, (see Table 6) is not greater than 50 times the design depth of water, *W*, (see Figure 4) which in the case of an eaves gutter is equal to its overall depth to spillover. For sloping or level gutters that exceed this limit, the design capacity Q_L from 5.1.2 or 5.1.4 shall be multiplied by the appropriate capacity factor, F_L, from Table 6, i.e. the gutter capacity is $Q_L \cdot F_L$.

5.1.7 The capacity factors, F_L, for sloping gutters given in Table 6 are only applicable if each section of gutter in a continuous length has a downward slope towards the outlet that drains it. If a gutter with a continuous slope has more than one outlet, the increase in capacity of a length with a favourable slope will be approximately balanced by the decrease in capacity of a length with an adverse slope. In such cases, all gutter lengths shall be designed as though they were nominally level.

5.1.8 Values of gutter design capacity, Q_L, obtained from 5.1.2 or 5.1.4, shall be multiplied by a reduction factor of 0,85 where a gutter length contains one or more gutter angles greater than 10°. Angles should be avoided close to an outlet.

5.2 Valley and parapet gutters

5.2.1 Valley and parapet gutters may be laid level or to a gradient, unless stated otherwise by local and national regulation and practice. A gutter laid to a nominal gradient of 3 mm/m or less (referred to as "nominally level") shall be designed as a level gutter.

5.2.2 The minimum freeboard at the upstream end of a valley or parapet gutter shall be not less than the dimension given in Table 5. Above the water line, the sides of the gutter are not required to continue at the same slope as below the water line but shall not slope sharply inwards (see Figure 4).

Table 5 — Minimum freeboard for valley and parapet gutters

Depth of gutter including freeboard, *Z* mm	**Minimum freeboard mm**
Less than 85	25
85 to 250	0,3 *Z*
Greater than 250	75

5.2.3 For a valley or parapet gutter of rectangular, trapezoidal or similar shape (see Figure 4), designed as level and with an outlet capable of allowing free discharge, the capacity shall be calculated from equation (5):

$$Q_L = 0{,}9 \cdot Q_N \qquad (5)$$

where

Q_L is the design capacity of "short" gutter, see 5.2.5, laid level, in litres per second (l/s);
0,9 is a factor of safety, (dimensionless);
Q_N is the nominal capacity of the gutter, calculated as $Q_{SV} \cdot F_d \cdot F_s$, in litres per second (l/s);
Q_{SV} is the capacity of an equivalent square valley or parapet gutter, calculated as $3{,}89 \cdot 10^{-5} \cdot A_W^{1{,}25}$, in litres per second (l/s);
A_W is the cross-sectional area of the gutter below the freeboard, in square millimetres (mm²);
F_d is the depth factor, determined from Figure 5, dimensionless;
F_s is the shape factor, determined from Figure 6, dimensionless.

NOTE:
For convenience, the variation of Q_{SV} with A_W is plotted in Figure 7.

5.2.4 The capacity of a gutter when tested in accordance with annex A may be substituted for calculated values of Q_N. Q_N determined by test shall be multiplied by a safety factor of 0,9 to give Q_L used for design purposes.

5.2.5 A gutter shall be considered to be hydraulically "short" if its drainage length, L, is not greater than 50 times the design depth of water, W, which in the case of a valley or parapet gutter is equal to its overall depth to spillover less the allowance for freeboard. For sloping or level gutters that exceed this limit, the design capacity Q_L from 5.2.3 or 5.2.4 shall be multiplied by the appropriate capacity factor, F_L, from Table 6, i.e. the overall gutter capacity is $Q_L \cdot F_L$.

5.2.6 The capacity factors, F_L, for sloping gutters given in Table 6 are only applicable if each section of gutter in a continuous length has a downward slope towards the outlet that drains it. If a gutter with a continuous slope has more than one outlet, the increase in capacity of a length with a favourable slope will be approximately balanced by the decrease in capacity of a length with an adverse slope. In such cases, all gutter lengths shall be designed as though they were nominally level.

5.2.7 Where obstructions are present in a valley or parapet gutter (such as walkways), twice the area of the obstruction viewed in the direction of the cross-section, shall be deducted from the cross-sectional area of the gutter, A_W, when calculating its capacity.

5.2.8 Table 6 — Capacity factor, F_L, for long gutters, nominally level or sloping towards an outlet

$\frac{L}{W}$	Capacity factor, F_L				
	Nominally level 0 mm/m to 3 mm/m	**Gradient 4 mm/m**	**Gradient 6 mm/m**	**Gradient 8 mm/m**	**Gradient 10 mm/m**
50	1,00	1,00	1,00	1,00	1,00
75	0,97	1,02	1,04	1,07	1,09
100	0,93	1,03	1,08	1,13	1,18
125	0,90	1,05	1,12	1,20	1,27
150	0,86	1,07	1,17	1,27	1,37
175	0,83	1,08	1,21	1,33	1,46
200	0,80	1,10	1,25	1,40	1,55
225	0,78	1,10	1,25	1,40	1,55
250	0,77	1,10	1,25	1,40	1,55
275	0,75	1,10	1,25	1,40	1,55
300	0,73	1,10	1,25	1,40	1,55
325	0,72	1,10	1,25	1,40	1,55
350	0,70	1,10	1,25	1,40	1,55
375	0,68	1,10	1,25	1,40	1,55
400	0,67	1,10	1,25	1,40	1,55
425	0,65	1,10	1,25	1,40	1,55
450	0,63	1,10	1,25	1,40	1,55
475	0,62	1,10	1,25	1,40	1,55
500	0,60	1,10	1,25	1,40	1,55

NOTES:

L is the drainage length of gutter, in millimetres (mm);
W is the design water depth, i.e. full depth of gutter to spillover level for eaves gutters or depth of gutter to spillover level less freeboard allowance for valley and parapet gutters, in millimetres (mm).

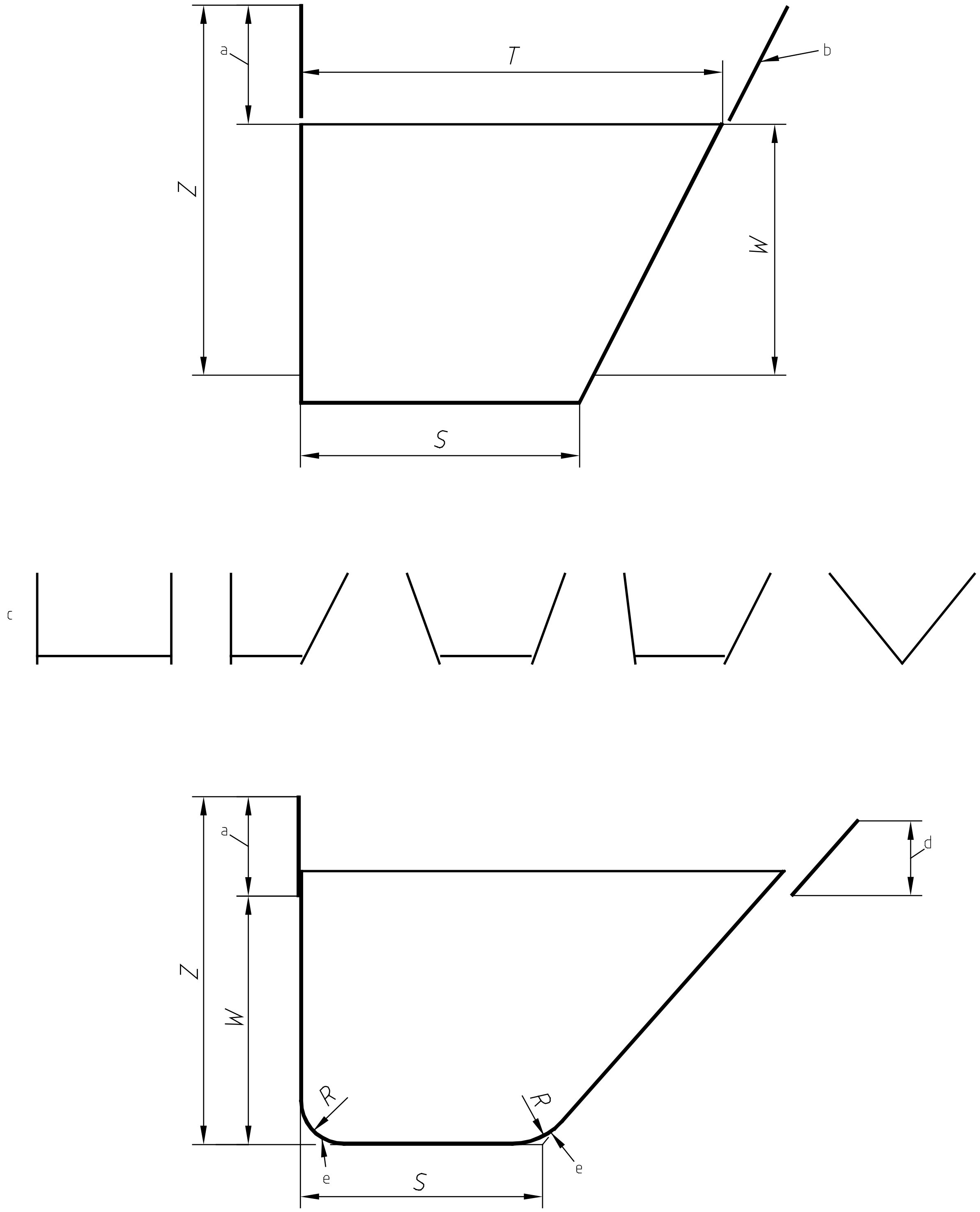

a	Freeboard
b	Extensions of the sides of valley gutters do not form part of the gutter for the purposes of Figures 5, 6, 7 and 10 (see 5.2.2)
c	Applicable to:
d	Spillover level
e	Rounded corners shall be allowed for in calculating cross-sectional area but, for the purpose of Figures 6 and 10, *S* may be measured to the point indicated provided that *R* is not greater than *W*/4
S	Width at sole
T	Width at designed water line
W	Depth below designed water line

Figure 4 — Dimensions for use with Figures 5, 6, 7 and 10

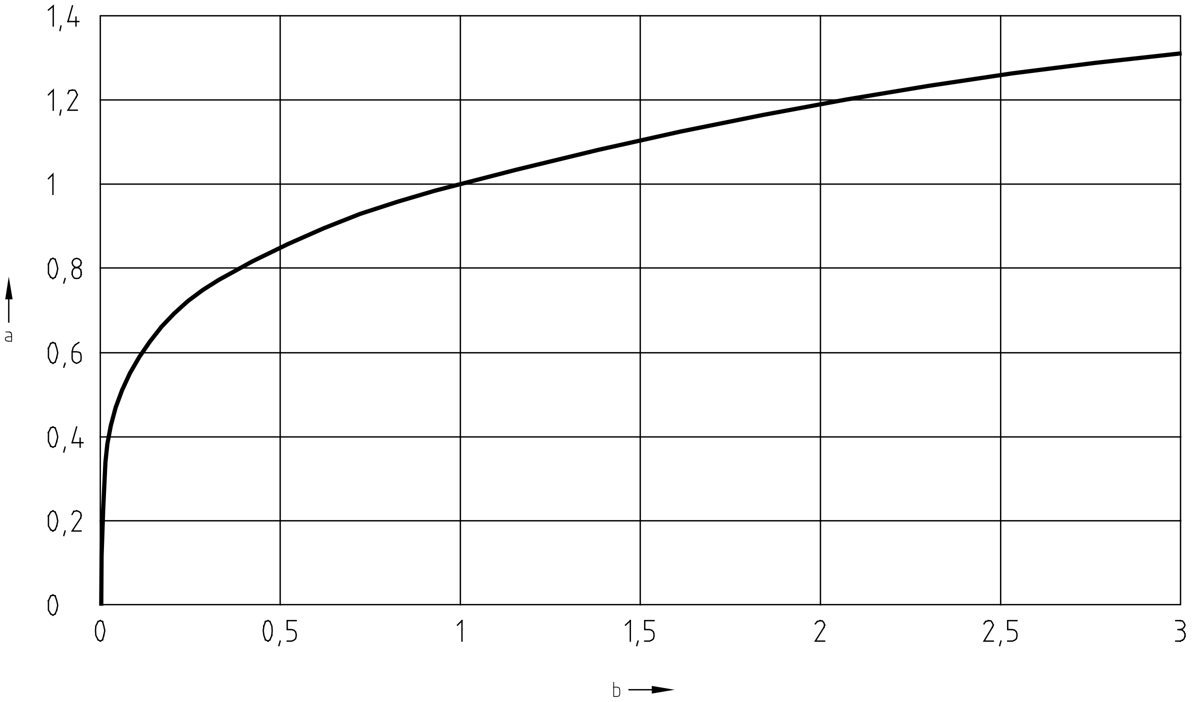

a Depth factor F_d b *W/T*

Figure 5 — Depth factor, F_d

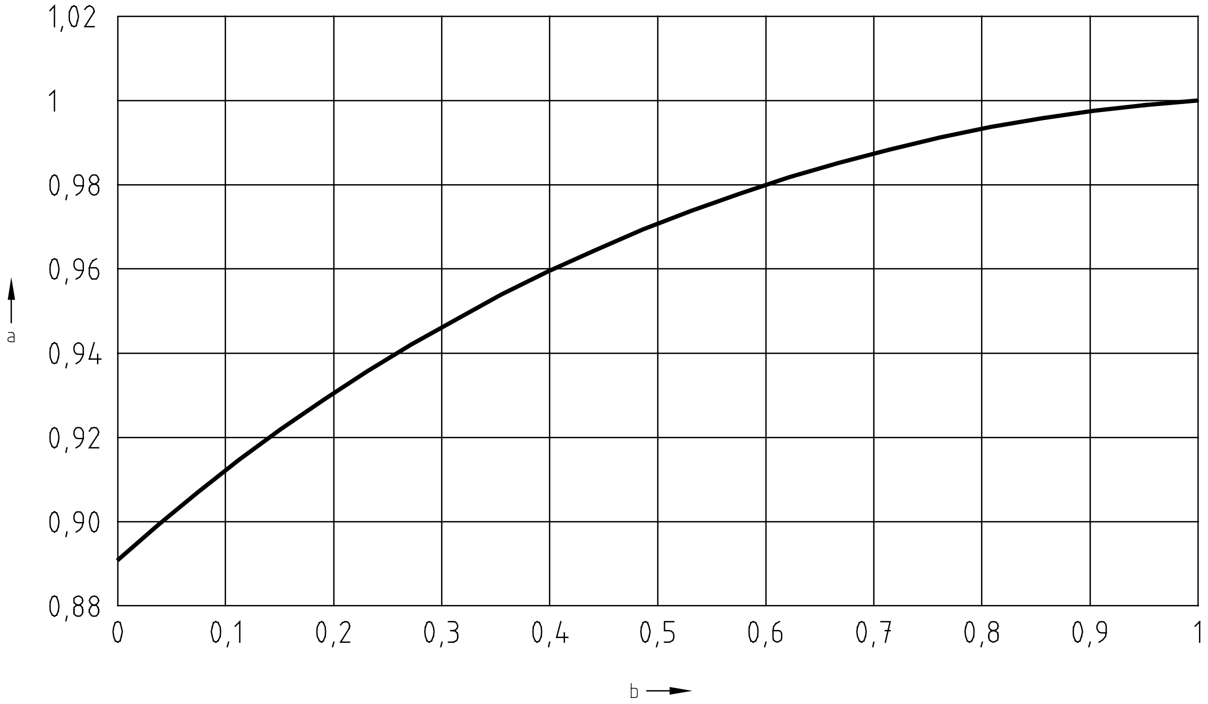

a Shape factor F_s b *S/T*

Figure 6 — Shape factor, F_s

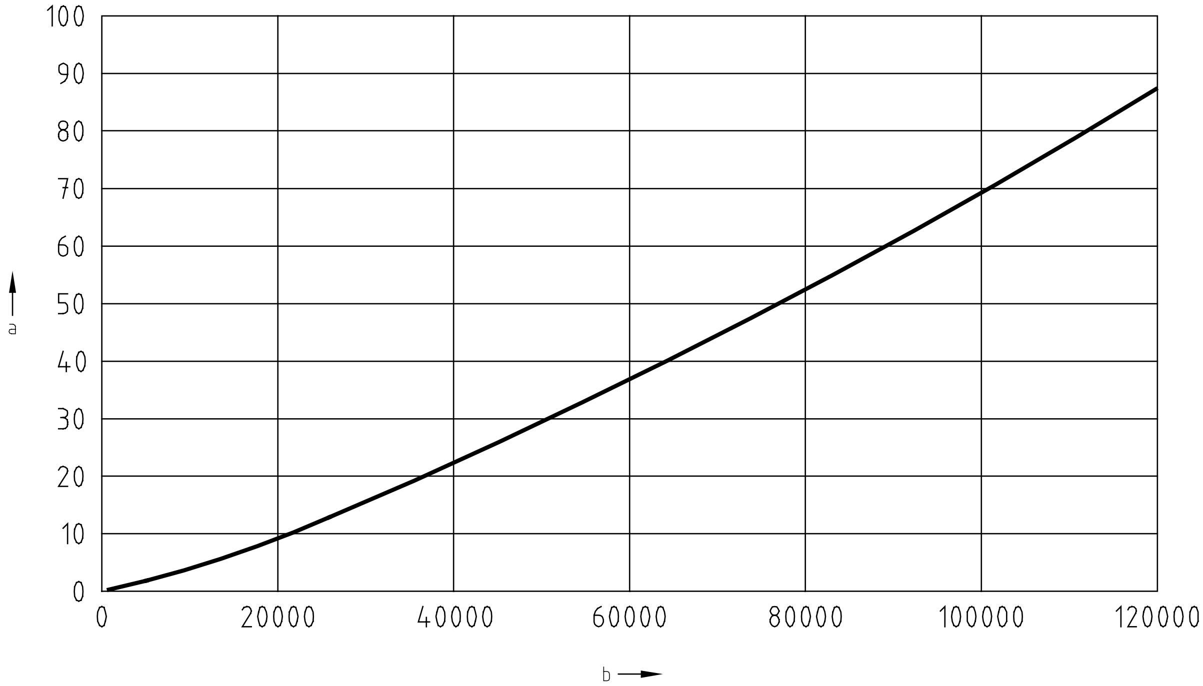

a Capacity Q_{SV} in l/s

b Cross-sectional area to design water line A_w in mm²

Figure 7 — Capacity of square valley and parapet gutters, hydraulically short and nominally level

5.3 Gutter outlets

5.3.1 It is impractical to lay down simple rules for the dimensions of outlets from gutters with non-flat soles, and in general their capacities should be established by test (see annex A). Outlets from gutters with flat soles should be calculated in accordance with 5.3.4 or determined by test.

5.3.2 For non-flat soled gutters, experience has shown that, where the opening in the sole of the gutter has a plan area approximately twice that of the cross-sectional area of the smallest rainwater pipe capable of taking the flow (calculated from Table 8), and a smooth transition to the rainwater pipe, the outlet is deemed to be adequate for the capacity of the gutter laid nominally level. This arrangement is shown in Figure 8. National and local regulation and practice may also dictate minimum dimensions of outlets.

5.3.3 When an outlet from a non-flat soled gutter is fitted with a strainer, the capacity of the gutters leading to it shall be multiplied by a factor of 0,5.

5.3.4 The capacity of an outlet from a gutter, having a flat sole wider than the diameter of the outlet, shall be calculated using the equations given in Table 7.

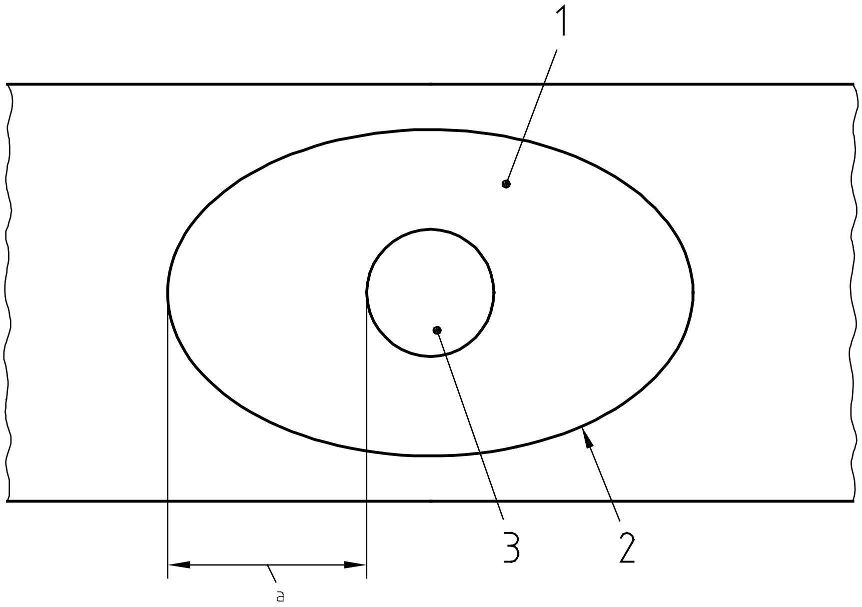

1 Area ≥ 2 × cross-sectional area of rainwater pipe calculated from Table 7
2 Edge of outlet transition
3 Minimum size of rainwater pipe capable of taking flow (Table 7)

a ≥ gutter depth, *Z*

Figure 8 — Outlets from non-flat soled gutters, to illustrate 5.3.2

5.3.5 When an outlet from a gutter is fitted in the bottom of a sump or box receiver (see Figure 11), the minimum length of weir from the gutter to the box shall be calculated from Figure 12, using a head not exceeding that necessary to allow free discharge conditions in the gutter which may be obtained from Figure 10. The length of weir may be taken as being the perimeter of the box receiver, over which water can flow; for a circular outlet this is $\pi \cdot D_O$ (where D_O is defined in Figure 9).

NOTE:
Figure 12 may be used to find the capacity of overflows from valley gutters, overflow openings in parapets and chutes discharging through openings in parapets of flat roofs into rainwater heads.

Table 7 — Outlet capacity

	Circular outlets	Non-circular outlets
Weir flow	$Q_O = \frac{k_O D h^{1.5}}{7\,500}$ Valid where $h = \frac{D}{2}$ or less	$Q_O = \frac{k_O L_W h^{1.5}}{24\,000}$ Valid where $h = \frac{2\,A_0}{L_W}$ or less
Orifice flow	$Q_O = \frac{k_O D^2 h^{0.5}}{15\,000}$ Valid where $h > \frac{D}{2}$	$Q_O = \frac{k_O A_O h^{0.5}}{12\,000}$ Valid where $h > \frac{2\,A_O}{L_W}$

NOTES:

1. Q_O is the total flow to the outlet (calculated on area drained by the outlet in accordance with section 4), in litres per second;
   D is the effective diameter of the outlet (see Figure 9), in millimetres;
   h is the head at outlet (see note 3), in millimetres;
   k_O is the outlet coefficient, dimensionless, taken as:
   1,0 for unobstructed outlets,
   0,5 for outlets fitted with strainers or gratings;
   L_W is the length of weir over which water can flow, in millimetres;
   A_O is the plan area of outlet, in square millimetres.

2. For the weir flow equation to be applicable, there shall be a gap between the edge of the outlet and the side of the gutter of at least 5% of the diameter of the outlet.

3. The head at the outlet, h, of a trapezoidal, rectangular or triangular gutter is the designed maximum depth of flow, W, multiplied by the outlet head factor, F_h, taken from Figure 10, depending upon S/T (see Figure 4), i.e. $h = F_h \cdot W$.

5.4 Flat roof outlets

5.4.1 The drainage of flat roofs shall take into account the strength and construction of the roof.

5.4.2 Any outlet, overflow or chute shall be designed so that its operating head does not cause a build up of water that exceeds the roof design loading or penetrates the roof covering, e.g. through joints.

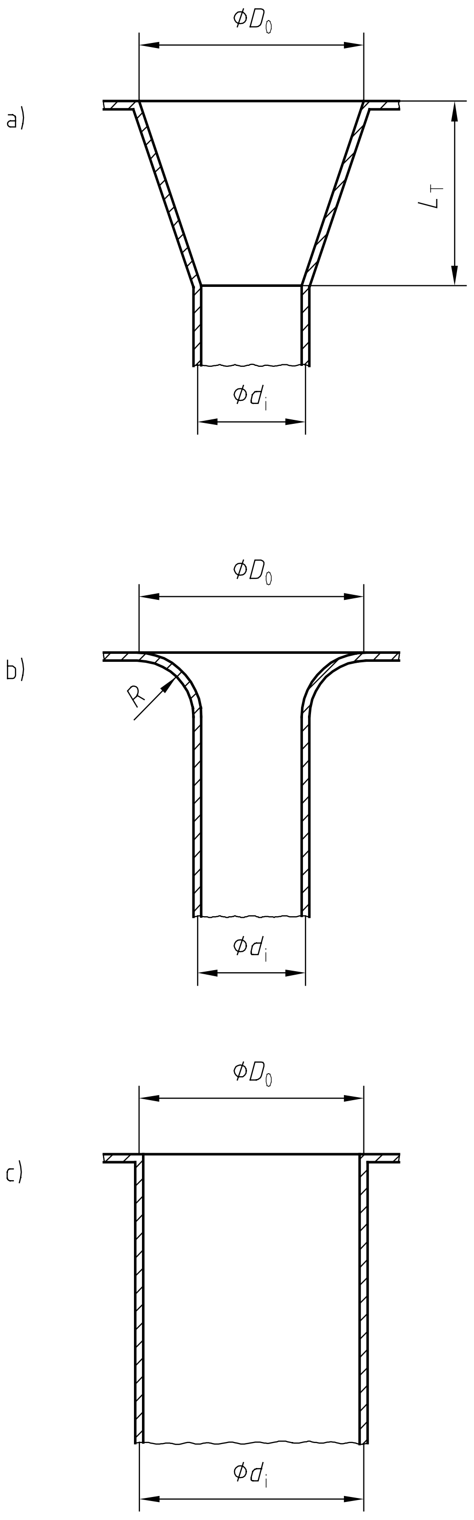

a) Tapered outlet
   $D_O \geq 1{,}5 \cdot d_i$; $L_T \geq D_O$; Effective diameter $D = D_O$
b) Round-edged outlet
   $D_O \geq 1{,}5 \cdot d_i$; $R \geq D_O/6$; Effective diameter $D = 0{,}9 \cdot D_O$
c) Sharp-edged outlet
   Effective diameter $D = D_O = d_j$

Figure 9 — Effective diameters of gutter outlets

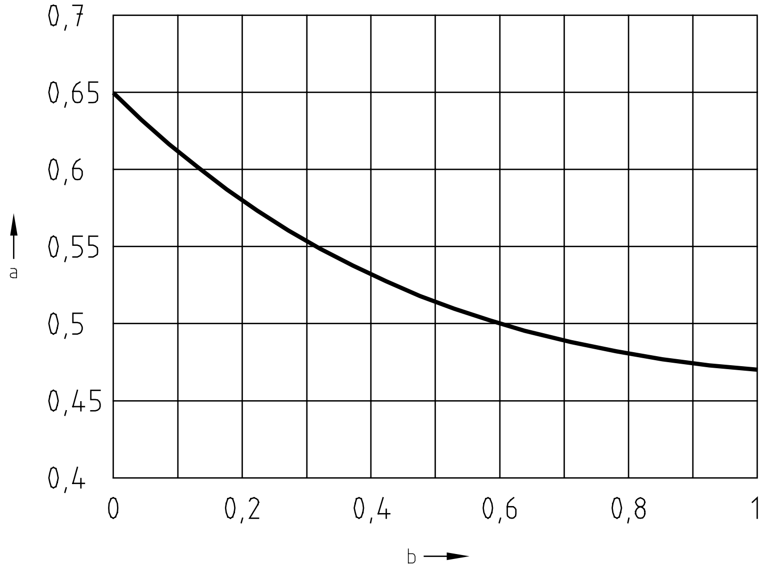

a Outlet head factor F_h
b *S/T*

Figure 10 — Outlet head factor, F_h, for determining available head at outlet

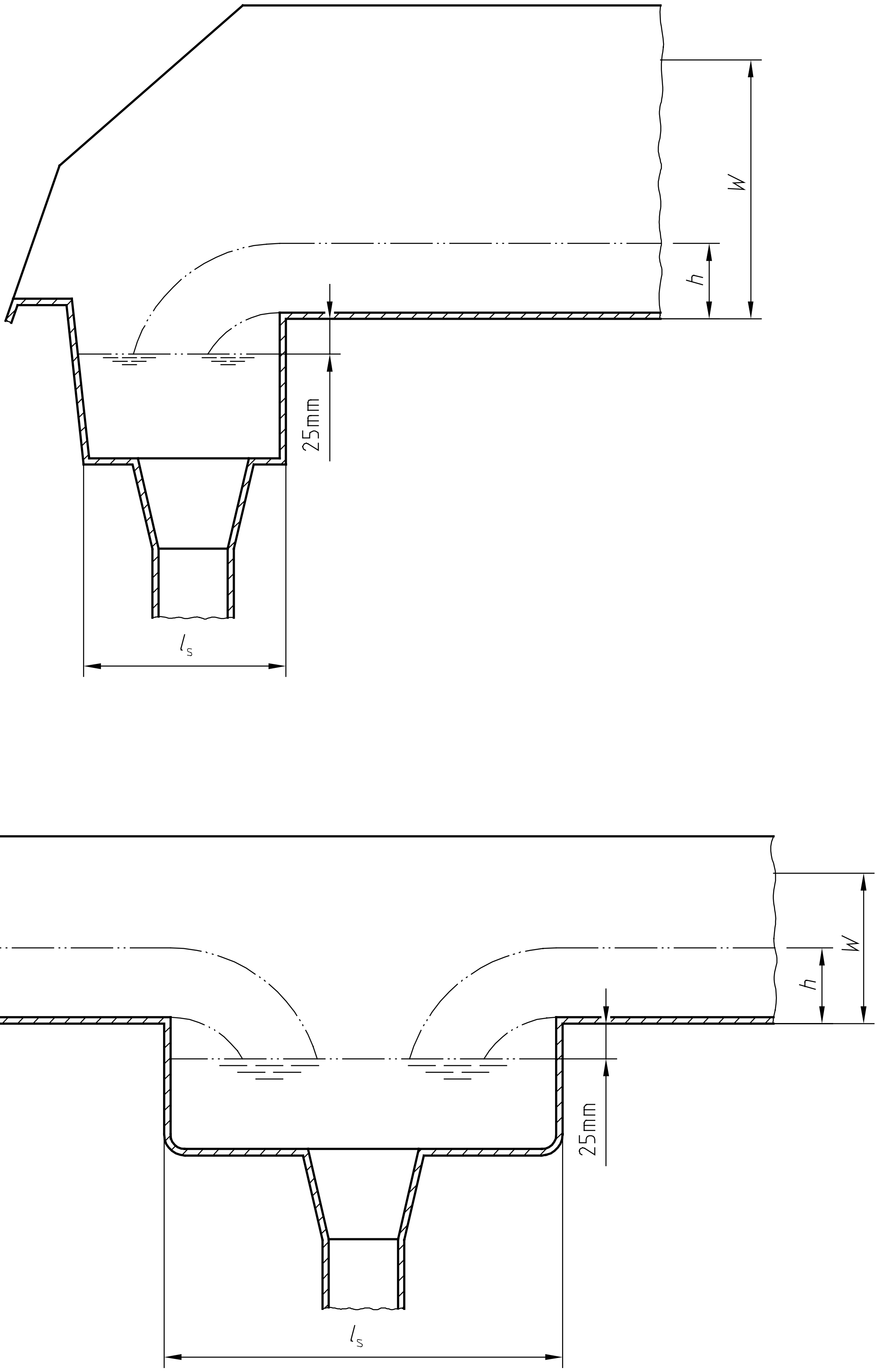

above: Sump at end of valley gutter or parapet outlet
below: Sump in valley gutter

Figure 11 — Box receivers or sumps

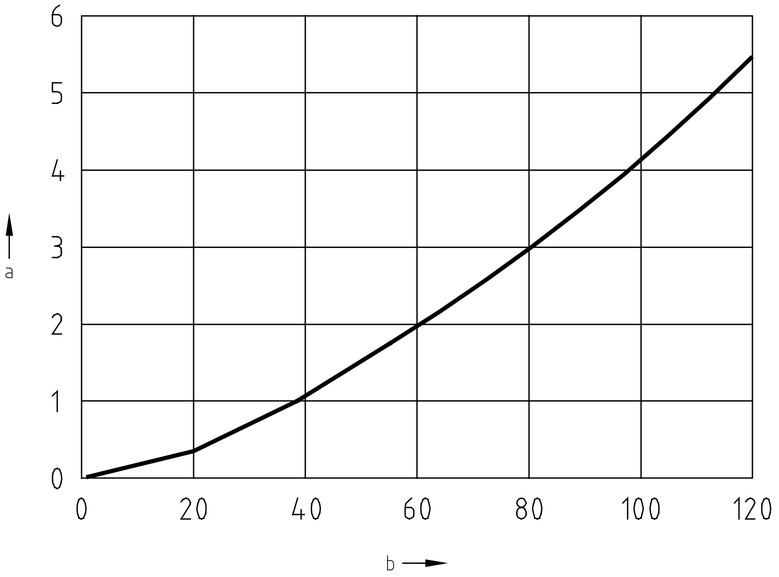

a Flow per 100 mm length of weir (l/s)
b Head (mm)

$$Q_W = \frac{L_W \cdot h^{1,5}}{24000}$$

where

L_W = length of weir, mm;
h = head over weir, mm;
Q_W = flow rate over weir, l/s.

Figure 12 — Flow over sharp-edged weirs

6 Rainwater pipes

6.1 Part filled (non-siphonic systems)

6.1.1 The maximum design flow, (calculated on the area drained by the rainwater pipe in accordance with clause 4) in vertical circular rainwater pipes shall be not greater than the capacity given in Table 8. A filling degree of 0,33 shall be used unless national and local regulation and practice states that another filling factor (between 0,20 and 0,33) is to be used. It should be noted that the capacity of the rainwater system is usually dependent upon the capacity of the gutter outlet or flat roof outlet rather than the capacity of the rainwater pipe.

Table 8 — Capacities of vertical rainwater pipes

Internal diameter of rainwater pipe, d_i (mm)	**Capacity Q_{RWP} (l/s)**		**Internal diameter of rainwater pipe, d_i (mm)**	**Capacity Q_{RWP} (l/s)**	
	Filling degree f = 0,20	Filling degree f = 0,33		Filling degree f = 0,20	Filling degree f = 0,33
50	0,7	1,7	140	11,4	26,3
55	0,9	2,2	150	13,7	31,6
60	1,2	2,7	160	16,3	37,5
65	1,5	3,4	170	19,1	44,1
70	1,8	4,1	180	22,3	51,4
75	2,2	5,0	190	25,7	59,3
80	2,6	5,9	200	29,5	68,0
85	3,0	6,9	220	38,1	87,7
90	3,5	8,1	240	48,0	110,6
95	4,0	9,3	260	59,4	137,0
100	4,6	10,7	280	72,4	166,9
110	6,0	13,8	300	87,1	200,6
120	7,6	17,4	> 300	Use Wyly-Eaton equation	Use Wyly-Eaton equation
130	9,4	21,6			

NOTE
Based on the Wyly-Eaton equation:

$$Q_{RWP} = 2,5 \cdot 10^{-4} \cdot k_b^{-0,167} \cdot d_l^{2,667} \cdot f^{1,667}$$

where

Q_{RWP}	is the capacity of rainwater pipe, in litres per second (l/s);
k_b	is the pipe roughness, in millimetres (assumed 0,25mm);
d_i	is the internal diameter of rainwater pipe, in millimetres (mm);
f	is the filling degree, defined as the proportion of cross-section filled with water, dimensionless.

NOTE 1:
The maximum capacity in a vertical non-circular rainwater pipe may be taken as equal to the maximum flow in a circular pipe of the same cross-sectional area.

NOTE 2:
When a vertical rainwater pipe has an offset with a gradient of not less than 10° (180 mm/m) to the horizontal, the offset may be ignored.

6.1.2 The flow in offsets less than 10° to the horizontal shall be calculated as a drain with a filling degree of not more than 70% unless national and local regulation and practice states otherwise (as illustrated in Figure 13).

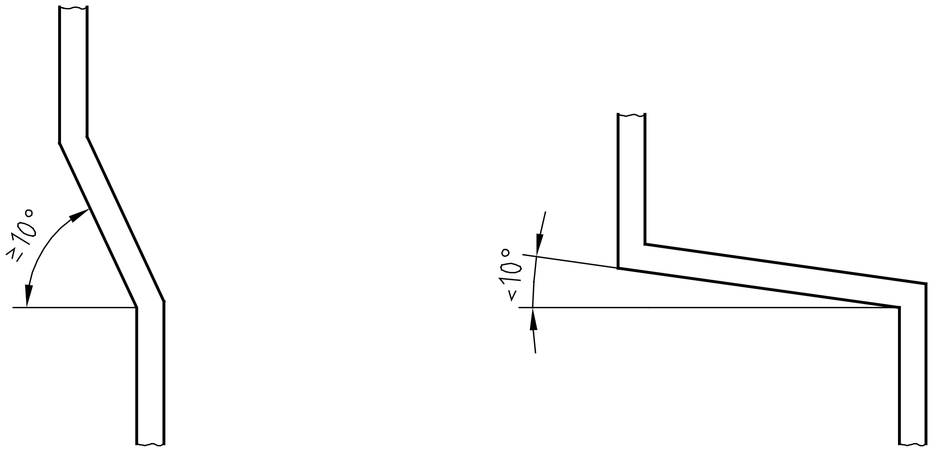

Calculate capacity as a vertical rainwater pipe

Calculate capacity as a drain

Figure 13 — Effect of offsets in rainwater pipes

6.1.3 Consideration shall be given to the risk of blockage, especially when using small bore pipes (i.e. pipes less than DN 75).

6.2 Siphonic systems

6.2.1 The system shall drain the runoff from the impermeable area served, calculated in accordance with clause 4, without taking gutter storage into consideration. It is recommended that the recurrence period method (see 4.2.1) should be used whenever possible.

6.2.2 For flat roof drainage, the system shall conform to clause 5.4. For gutter drainage, the system shall conform to clauses 5.1 and 5.2.

6.2.3 The siphonic effect shall commence quickly enough to prevent design water depths on the roof or in the gutter being exceeded.

6.2.4 The flow capacity of individual outlets shall be balanced to ensure the entire system performs as specified.

6.2.5 The siphonic system shall be designed to take into account any surcharging of the buried drainage.

6.2.6 Pipes and fittings shall withstand the maximum positive and negative pressures encountered under design conditions.

6.2.7 The minimum velocity in the system at the design rainfall shall be chosen to prevent deposition in pipework and to ensure rapid commencement of the siphonic effect.

6.2.8 Outlets shall be fitted with strainers to exclude solid material and prevent blockages. The effect of a strainer on water levels in gutters or on flat roofs shall be taken into account.

6.2.9 The minimum internal pipe diameter, d_i, shall be 32 mm.

6.2.10 The design method shall be validated by physical testing.

6.2.11 The lowest design pressure shall be chosen to prevent possible cavitation damage and collapse of pipes.

6.2.12 Reductions in diameter in the direction of flow are permitted in siphonic systems.

6.2.13 The system shall be installed in accordance with the design assumptions. The effect of any difference between the design and the system as installed shall be calculated and appropriate action taken.

6.3 Drains

6.3.1 The hydraulic capacity of drains should be calculated using any established hydraulic equation, using Tables or charts as convenient. However, in cases of dispute the Colebrook-White[1] equation shall be used, see annex C.

6.3.2 For convenience, drain capacities calculated by the Colebrook-White equation have been tabulated in annex C.

6.3.3 The diameter of drains shall be no smaller than the rainwater pipe connected to them and not less than DN100 unless national or local regulations and practice state otherwise.

6.3.4 Where rainwater and foul water are both discharged into the same drain or sewer, the rainwater system shall be trapped in such a way that avoids foul air from being discharged to a position where it could cause a nuisance. Traps shall be so placed that they are accessible for clearing blockages and shall have adequate capacity to prevent loss of seal by evaporation during prolonged dry weather.

6.3.5 Drains shall be self-cleansing under design conditions unless allowed otherwise in national and local regulation and practice.

6.4 Connection to sanitary pipework

Rainwater from a small isolated area of roof or balcony may be taken into a sanitary stack or wastewater drain provided:

a) there is no national and local regulation and practice that prohibits it;
b) the rainwater connection is trapped;
c) the stack is not less than DN 100 and has adequate capacity (see EN 12056-2);
d) the rainwater flow does not exceed 1,0 l/s.

---

[1] Also known as the Prandtl-Colebrook equation

7 Layout

7.1 General

Design of roof drainage systems shall take account of construction tolerances and settlement so as to avoid backfalls and ponding, which may adversely affect durability.

7.2 Gutters

7.2.1 Gutters designed as level or nominally level should be laid to a nominal gradient of between 1 mm/m and 3 mm/m where practicable. The gradient of an eaves gutter shall not be so steep that the gutter drops below the level of the roof to such an extent that water discharging from the roof will pass over the front edge of the gutter.

7.2.2 In areas where snow lies on roofs, the front edge of the gutter should not be higher than the projected line of the roof, unless snow guards or other precautions are used.

7.3 Outlets

7.3.1 For flat roofs with parapets, at least two outlets (or one outlet plus an emergency overflow) shall be provided for each roof area.

7.3.2 Drainage from roof gardens should enable inspection and access to the outlet and shall incorporate means of excluding soil and debris from entering the roof drainage system.

7.3.3 The reduction in outlet capacity due to strainers being installed in outlets shall be taken into consideration, see 5.3.3 and 5.3.4. Where strainers are installed in outlets, the capacity of the outlet may be significantly reduced, even when the strainer is clean.

7.4 Emergency outlets

Overflows or emergency outlets should be provided on flat roofs with parapets and in non-eaves gutters in order to reduce the risk of overspilling of rainwater into a building or structural overloading.

7.5 Access

7.5.1 Access for cleaning, inspection and, if required, for testing shall be installed above the foot of a rainwater stack and at changes in direction where there is a risk of blockage. Where a rainwater pipe discharges via a pipe shoe, this is deemed to provide adequate access.

7.5.2 Where practicable, access points should not be sited in habitable rooms.

7.6 Pipework

7.6.1 In horizontal and near horizontal pipelines, increases in size shall be installed such that the soffit is continuous in order to prevent air from being trapped.

7.6.2 Where pipes pass through the external walls of the building, a watertight seal shall be made.

7.6.3 Rainwater pipes should not be encased in structural elements of buildings. Where they are installed in ducts or casings, they shall be accessible for inspection, maintenance, repair and replacement. This does not apply to rainwater drains, which may be constructed in floors.

7.6.4 Internal rainwater pipes shall be able to withstand the head of water likely to occur in the event of a blockage.

7.6.5 Pipework shall not reduce in diameter in the direction of flow, except in the case of siphonic systems.

7.6.6 Where condensation would cause problems, pipework inside buildings shall be insulated.

7.6.7 Where there is no alternative to a rainwater pipe discharging on to a lower roof or paved area, a pipe shoe should be fitted to divert water away from the building. Special shoes are available where necessary to reduce splashing.

7.6.8 Where rainwater pipes discharge on to a lower roof, the covering of the roof should be reinforced at the point where the pipe shoe discharges.

7.6.9 Where a rainwater pipe discharges into a gully, it should terminate below the gully grating but above the water seal, preferably by the use of a back inlet.

7.7 Trace heating

In areas subject to freezing conditions, where ice could block outlets and cause flooding inside buildings, consideration shall be given to installation of trace heating in valley gutters and pipes.

7.8 Change of building use

When the use of a building changes, the rainwater system should be checked for adequacy.

ANNEX A (NORMATIVE)

TESTING OF GUTTERS AND OUTLETS

A.1 Capacity of gutter and outlet in combination

A.1.1 Introduction

This test is appropriate for rainwater systems in which a particular type of outlet is provided for use with a particular type of gutter and is connected directly to the sole of the gutter. For such systems, it is best to determine the flow capacity of the gutter and outlet in combination. The measured capacity may be used in place of the nominal capacity, Q_N, calculated in clauses 5.1.2, 5.1.4 or 5.2.3.

A.1.2 Test method

a) Install the outlet to receive flow from two equal lengths of straight gutter of uniform depth either side of the outlet. The length of each gutter shall be 50 times the design depth of flow, W, in the gutter ±50 mm, subject to a minimum length of 2 m. In the case of an eaves gutter, W is equal to the overall depth of the gutter, Z.

b) Install the gutters level, with the invert of the gutters not varying by more than ±1 mm from a horizontal line. The level at the upstream end of each gutter shall not be higher than the corresponding level at the outlet.

c) Install a stop end at the upstream end of each gutter.

d) Connect onto the outlet a vertical pipe of constant diameter with a length equal to $4A/P$, where A is the cross-sectional area of the pipe at the bottom of the outlet and P is the corresponding wetted perimeter; for circular pipes, the required length is equal to the bottom diameter of the outlet.

e) Supply water to the gutter to produce a similar type of uniform flow to that of a sloping roof on one side only of the gutter. The rate of inflow per unit length to the gutter (averaged over distances of 250 mm) shall not vary by more than ±5 % from the mean inflow rate (equal to the total flow rate divided by the total length of gutter being tested). The total flow rate shall be measured to an accuracy of ±2 % by a calibrated instrument. The temperature of the water in the tests shall be between 5^oC and 25^oC.

f) For eaves gutters designed to flow full, determine the capacity of an outlet with two lengths of gutter by gradually increasing the flow rate to the gutters until the water level at the deepest point is just below the spillover level. Maintain constant for at least 5 min the flow rate corresponding to the capacity of the system without overflowing. Disregard minor splashing caused by water droplets.

g) For valley or parapet gutters designed not to flow full, install a pressure tapping in the gutter sole at the upstream end of each length. Determine the capacity of the system as the maximum flow rate for which the time-averaged water depths measured by the tappings over a 5 min period do not exceed the design flow depth, W, of the gutters.

h) If required, carry out an additional test using the above procedure to determine the flow capacity of an outlet receiving water from only one length of gutter.

A.2 Capacity of gutter

A.2.1 Introduction

This test is appropriate for gutters that may be used with a variety of outlets. The test determines the capacity of a single gutter length when discharging freely at one end. The measured capacity may be used in place of the nominal capacity, Q_N, calculated in 5.1.2, 5.1.4 or 5.2.3.

A.2.2 Test method

Install and measure the gutter capacity as described in A.1.2. The gutter shall be straight in plan and its length shall be 50 times the design depth of flow, W, ±50 mm. Fit one end of the gutter with a stop-end and leave the other end open so as to allow the water to discharge freely.

A.3 Capacity of gutter outlet

A.3.1 Introduction

This test is appropriate for outlets that may be used with a range of different gutter types and layouts. The test determines the relationship between the flow rate in the outlet and the depth of water in the gutter near to the outlet. The results may be used in place of the equations in 5.3.4.

A.3.2 Test method

a) Install the outlet to receive flow from two equal lengths of straight, level rectangular gutter either side of the outlet. The outlet shall be located on the centre line of the gutters whose width shall not be less than 3 times the top width of the outlet (measured transverse to the centre line). Each gutter length shall not be less than 1,5 m.

b) Install a pressure tapping on each side of the outlet on the centre lines of the gutters. The distance of each tapping from the centre line of the outlet shall be 3 times the top width of the outlet.

c) Fit a length of vertical pipe to the outlet as specified in A.1.2

d) Supply flow at equal rates to the upstream end of each gutter; do not introduce the flow uniformly along the length of the gutter as in A.1 and A.2. The inlet arrangements for the flow shall produce smooth flow conditions in the gutters.

e) Carry out tests for an appropriate range of steady flow rates and water depths. Measure the total flow rate to the outlet to an accuracy of ±2 %. Maintain constant each flow rate for at least 5 min and measure the time-averaged water depths near the outlet with the two pressure tappings; define the head-discharge characteristic of the outlet using the larger of the two water depths measured by the tappings.

ANNEX B (INFORMATIVE)

NATIONAL AND LOCAL REGULATIONS AND PRACTICE

The following documents contain details which should be considered within the framework of this standard. This list was correct at the time of publication of this standard but should not be considered to be exhaustive. Users of this standard should check for the latest applicable documents:

Austria

ÖNORM B 2501 "Entwässerungsanlagen für Gebäude und Grundstücke; Bestimmungen für Planung und Ausführung"

ÖNORM B 2506-1 "Regenwasser-Sickeranlagen für Abläufe von Dachflächen und befestigten Flächen - Teil 1: Anwendung, hydraulische Bemessung, Bau und Betrieb"

ÖWAV Regelblatt 5 "Richtlinien für die hydraulische Berechnung von Abwasserkanälen"

ÖWAV Regelblatt 11 "Richtlinien für die abwassertechnische Berechnung von Schmutz-, Regen- und Mischwasserkanälen"

Belgium

According to the Royal Decree of 24.06.1988 on the municipalities, drainage installations inside buildings are of the competence of the municipalities. Drainage systems have thus to comply with the municipal regulations.

Denmark

Bygningsreglement BR 1995. Udgivet af By- og Boligministeriet.
Danish Building Regulation BR 1995. Published by the National Building and Housing Agency.
available from Schultz Information
Herstedvang 10
DK-2620 Albertslund
Telephone: + 45 43 63 23 00
Telefax: + 45 43 63 19 69

DS 432:1994 Norm for afløbsinstallationer.
DS 432:1994 Code of Practice for sanitary drainage - Waste water installations.

DS 432:1995/Ret.1 Norm for afløbsinstallationer.
DS 432:1995/Corr.1 Code of Practice for sanitary drainage - Waste water installations.

France

Règlement sanitaire départemental, titre III "Locaux d'habitation et assimilés" (circulaire du 9 août 1978 modifiée par les circulaires des 26 avril 1982, 20 janvier 1983, 18 mai 1984, 31 juillet 1995, 22 mai 1997).

Minimum rainfall intensity, $r = 0{,}05\ \mathrm{l/(s\cdot m^2)}$

Germany

National regulations require drainage system I to be used.
For EN 12056-1 refer to DIN 1986-1 and -2, DIN EN 1610 and DIN 18381.
For EN 12056-2 refer to DIN 1986-1 and -2, DIN EN 1610 and DIN 18381.
For EN 12056-3 refer to DIN 1986-1 and -2, DIN EN 1610 and DIN 18381.
For EN 12056-4 refer to DIN 1986-1 and -2 and DIN EN 12050-1 to -4.

For EN 12056-5 refer to DIN 1986-1 and -2, DIN EN 1610 and DIN 18381.

Minimum rainfall intensity, $r = 0{,}03$ l/(s·m²) [300 l/(s·ha)]

For prefabricated gutters, the manufacturer shall provide all hydraulic design data, determined in accordance with this standard.

Ireland

National Regulations: Building Regulations 1997 Technical Guidance Document H Drainage and Waste Water Disposal.

Local Regulations: Local Authorities have different requirements concerning the use of types of drainage systems, and the use of air admittance valves. Drainage System No 1 is the accepted method of gravity drainage inside buildings in Ireland.

Italy

LEGGE m.319 (Legge Merli) 10-05-76
Norme per la tutela delle acque dall'inquinamento coordinate con le modifiche ed integrazioni apportate dalla Legge 8/10/1976 n.690, dalla Legge 24/12/1979, n.650, dalla Legge 23/4/1981, n.153. G.U. n.48 del 21/2/1977

Decreto Legge n. 544, 10-08-76
Proroga dei termini di cui agli articoli 15, 17 e 18 della Legge 319 (Legge Merli) del 10/5/1976, recante G.U. n.211 dell'11/8/1976

Delibera MINISTERO LL.PP. COMITATO MINISTRI TUTELA ACQUE, 4-02-77
Criteri, metodoligie e norme tecniche generali di cui all'Art. 2 lettera b), d), e) della legge 319 (Legge Merli) del 10/5/1976, recante norme per la tutela delle acque dall'inquinamento

Decreto Legge n.467, 24-09-79
Proroga dei termini ed integrazioni delle Leggi 171 del 16/4/1973 e 319 (Legge Merli) del 10/5/1976, in materia di tutela delle acque dallo inquinamento, G.U. n.263 del 25/9/1979

LEGGE n.650, 24-12-79
Integrazioni e modifiche delle Leggi n.171 del 16/4/1973 e n.319 del 10/5/1976 (Legge Merli) in materia di tutela delle acque dall'inquinamento, G.U. n.352 del 29/12/1979

Decreto Legge n.620, 4-11-81
Provvedimento urgenti in materia di tutela delle acque dallo inquinamento, G.U. n.303 del 4/11/1981

LEGGE n.62, 5-03-82
Conversione in legge, con modificazioni, del D.L. 30/12/1981 n. 801 concernente provvedimenti urgenti in materia di tutela delle acque dallo inquinamento, G.U. n.63 del 5/3/1982

Circolare n.3035/SI/AC del MINISTERO DELL'AMBIENTE, 27-07-87
Indagine sugli impianti di depurazione delle acque reflue, G.U. n.183 del 7/8/1987

Decreto Legislativo n.132, 27-01-92
Attuazione della direttiva CEE n.80/68 concernente la protezione delle acque sotterranee dall'inquinamento provocato da alcune sostanze pericolose, Suppl. Ord. n.24 alla G.U. n.41 del 19/2/1992

Decreto n.309 del PRESIDENTE DELLA REPUBBLICA, 27-07-87
Regolamento per l'organizzazione del Servizio per la tutela delle acque, la disciplina dei rifiuti, il risanamento del suolo e la prevenzione dell'inquinamento di natura fisica e del Servizio per l'inquinamento acustico, atmosferico e per le industrie a rischio del Ministero dell'ambiente, G.U. n.136 dell'11/6/1992

Decreto Legge n.454, 15-11-93
Modifica alla disciplina degli scarichi delle pubbliche fognature e degli insediamenti civili che non recapitano in pubbliche fognature, G.U. n.268 del 15/11/1993

Decreto Legge n.31, 14-01-94
Modifica alla disciplina degli scarichi delle pubbliche fognature e degli insediamenti civili che non recapitano in pubbliche fognature, G.U. n.13 del 18/1/1994

Decreto Legge n.177, 17-03-94
Modifiche alla disciplina degli scarichi delle pubbliche fognature e degli insediamenti civili che non recapitano in pubbliche fognature, G.U. n.64 del 18/3/1994

Decreto Legge n.292, 16-05-94
Modifiche alla disciplina degli scarichi delle pubbliche fognature e degli insediamenti civili che non recapitano in pubbliche fognature, G.U. n.114 del 18/5/1994

Decreto Legge n.449, 15-07-94
Modifiche alla disciplina degli scarichi delle pubbliche fognature e degli insediamenti civili che non recapitano in pubbliche fognature, nonché riorganizzazione degli organi collegiali del Ministero dell'Ambiente, G.U. n.166 del 18/7/1994

Decreto Legge n.537, 17-09-94
Modifiche alla disciplina degli scarichi delle pubbliche fognature e degli insediamenti civili che non recapitano in pubbliche fognature, G.U. n.218 del 17/9/1994

Decreto Legge n.629, 16-11-94
Modifica alla disciplina degli scarichi delle pubbliche fognature e degli insediamenti civili che non recapitano in pubbliche fognature, G.U. n.269 del 17/11/1994

Decreto Legge n.9, 16-01-95
Modifica alla disciplina degli scarichi delle pubbliche fognature e degli insediamenti civili che non recapitano in pubbliche fognature, G.U. n.12 del 16/1/1995

LEGGE n.135, 23-05-97
Conversione in Legge, con modificazioni, del Decreto Legge 25 marzo 1997, n.67, recante disposizioni urgenti per favorire l'occupazione, G.U. n.119 del 24/5/1997

Netherlands

NEN 3215	Binnenriolering in woningen en woongebouwen – Eisen en bepalingsmethoden Sewerage inside dwellings – Requirements and determination methods
NTR 3216	Binnenriolering – Richtlijn voor ontwerp en uitvoering Sewerage inside dwellings – Guidelines for design and installation

Rainfall intensity, r = 0,030 l/(s · m^2)

Sweden

Boverkets Byggregler BBR 94
Swedish Building Regulations 94 with mandatory provisions and general advisory notes

Boverkets Författningssamling BFS 1993:57, kapitel 6: Hygien, hälsa och miljö
Code of Statutes 1993:57 of the Swedish National Board of Housing, Building and Planning, chapter 6: Hygiene, Health and Environment

Switzerland

1. National regulations require drainage system I to be used.
2. The permission of air admittance valves is subject to local bodies.
3. Swiss standard SN 592000 is applicable for all layout rules which are not contained in EN 12056 Parts 1 to 5.

Minimum rainfall intensity (clause 4.2.1)	0,030 l/(s · m^2)
Risk factor (clause 4.2.2)	As Table 2
Wind driven rain (clause 4.3.1)	Not taken into account
Minimum dimensions of outlets from non-flat sole gutters (clause 5.3.2)	No requirement
Filling degree of rainwater pipes (clause 6.1.1)	0,33
Maximum design depth of water on flat roofs (clause 5.4.1) (For snow load see SIA No.160)	35 mm
Runoff coefficient (clause 4.1)	1,0
Minimum diameter of drain (clause 6.3.3)	DN 100
Annex A	At the discretion of the manufacturer

Swiss Standard SN 592000 is applicable for all layout rules not contained in EN 12056 Parts 1 to 5.

United Kingdom

1. Building Regulations 1991; Approved Document H
   available from Department of the Environment, Transport and the Regions (DETR)
   HMSO Publications Centre
   PO Box 276
   London
   SW8 5DT
   Great Britain
   Telephone: + 44 171 873 9090
   Telefax: + 44 171 873 8200

2. Technical Standards for Compliance with the Building Standards (Scotland) Regulations 1990; Part M: Drainage and sanitary facilities.
   available from Scottish Office (SO)
   New St Andrew's House
   Edinburgh
   EH1 3TG
   Great Britain
   Telephone: + 44 131 244 4553

3. The Building Regulations (Northern Ireland) 1994; Technical booklet N: Drainage.
   available from Department of the Environment for Northern Ireland (DON)
   c/o HMSO Bookshops
   16 Arthur Street
   Belfast
   BT1 4GD
   Great Britain
   Telephone: + 44 1232 238451
   Telefax: + 44 1232 235401

4. National annexes to BS EN 12056-2

5. National annexes to BS EN 12056-3

ANNEX C (INFORMATIVE)

CAPACITY OF DRAINS

For convenience, drain capacities calculated from Colebrook-White formula using an effective roughness of k_b = 1,0 mm and a viscosity of $\nu = 1,31 \times 10^{-6}$ m^2/s are listed in C.1.

Table C.1 — Discharge values, filling degree 70%, (*h/d* = 0,7)

Slope	**DN 100**		**DN 125**		**DN 150**		**DN 200**		**DN 225**		**DN 250**		**DN 300**	
i	Q_{max}	v	Q_{max}	v	Q_{max}	v	Q_{max}	v	Q_{max}	v	Q_{max}	v	Q_{max}	v
cm/m	l/s	m/s	l/s	m/s	l/s	m/s	l/s	m/s	l/s	m/s	l/s	m/s	l/s	m/s
0,50	2,9	0,5	4,8	0,6	9,0	0,7	16,7	0,8	26,5	0,9	31,6	1,0	56,8	1,1
1,00	4,2	0,8	6,8	0,9	12,8	1,0	23,7	1,2	37,6	1,3	44,9	1,4	80,6	1,6
1,50	5,1	1,0	8,3	1,1	15,7	1,3	29,1	1,5	46,2	1,6	55,0	1,7	98,8	2,0
2,00	5,9	1,1	9,6	1,2	18,2	1,5	33,6	1,7	53,3	1,9	63,6	2,0	114,2	2,3
2,50	6,7	1,2	10,8	1,4	20,3	1,6	37,6	1,9	59,7	2,1	71,1	2,2	127,7	2,6
3,00	7,3	1,3	11,8	1,5	22,3	1,8	41,2	2,1	65,4	2,3	77,9	2,4	140,0	2,8
3,50	7,9	1,5	12,8	1,6	24,1	1,9	44,5	2,2	70,6	2,5	84,2	2,6	151,2	3,0
4,00	8,4	1,6	13,7	1,8	25,8	2,1	47,6	2,4	75,5	2,7	90,0	2,8	161,7	3,2
4,50	8,9	1,7	14,5	1,9	27,3	2,2	50,5	2,5	80,1	2,8	95,5	3,0	171,5	3,4
5,00	9,4	1,7	15,3	2,0	28,8	2,3	53,3	2,7	84,5	3,0	100,7	3,1	180,8	3,6

Key:

Q_{max} = Maximum flow rate permitted(l/s)

v = Velocity (m/s)

ANNEX D (INFORMATIVE)

LOGIC DIAGRAMS

Logic diagram 1 — Calculation of runoff

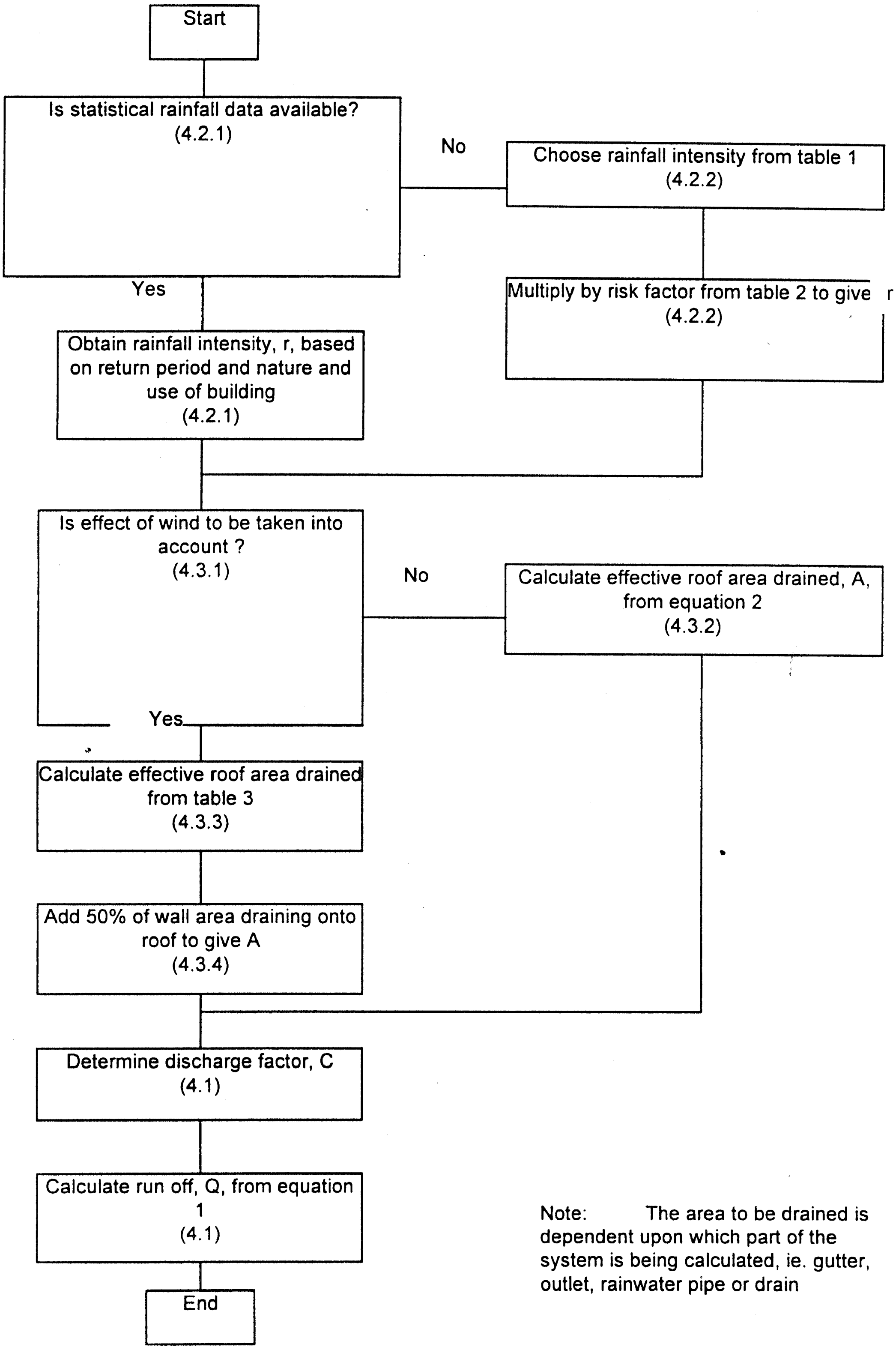

Note: The area to be drained is dependent upon which part of the system is being calculated, ie. gutter, outlet, rainwater pipe or drain

Logic diagram 2 — Siphonic drainage systems

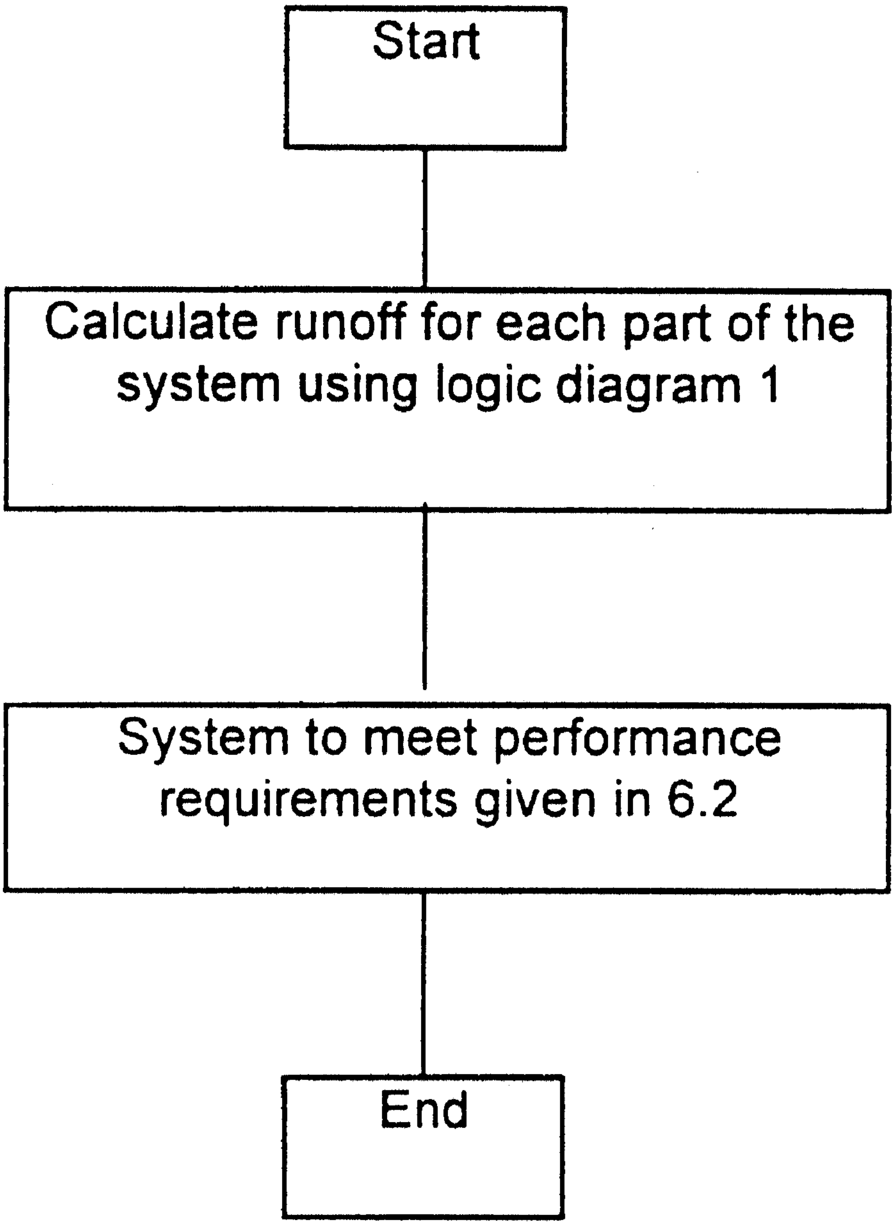

Logic diagram 3 — Flat roof drainage

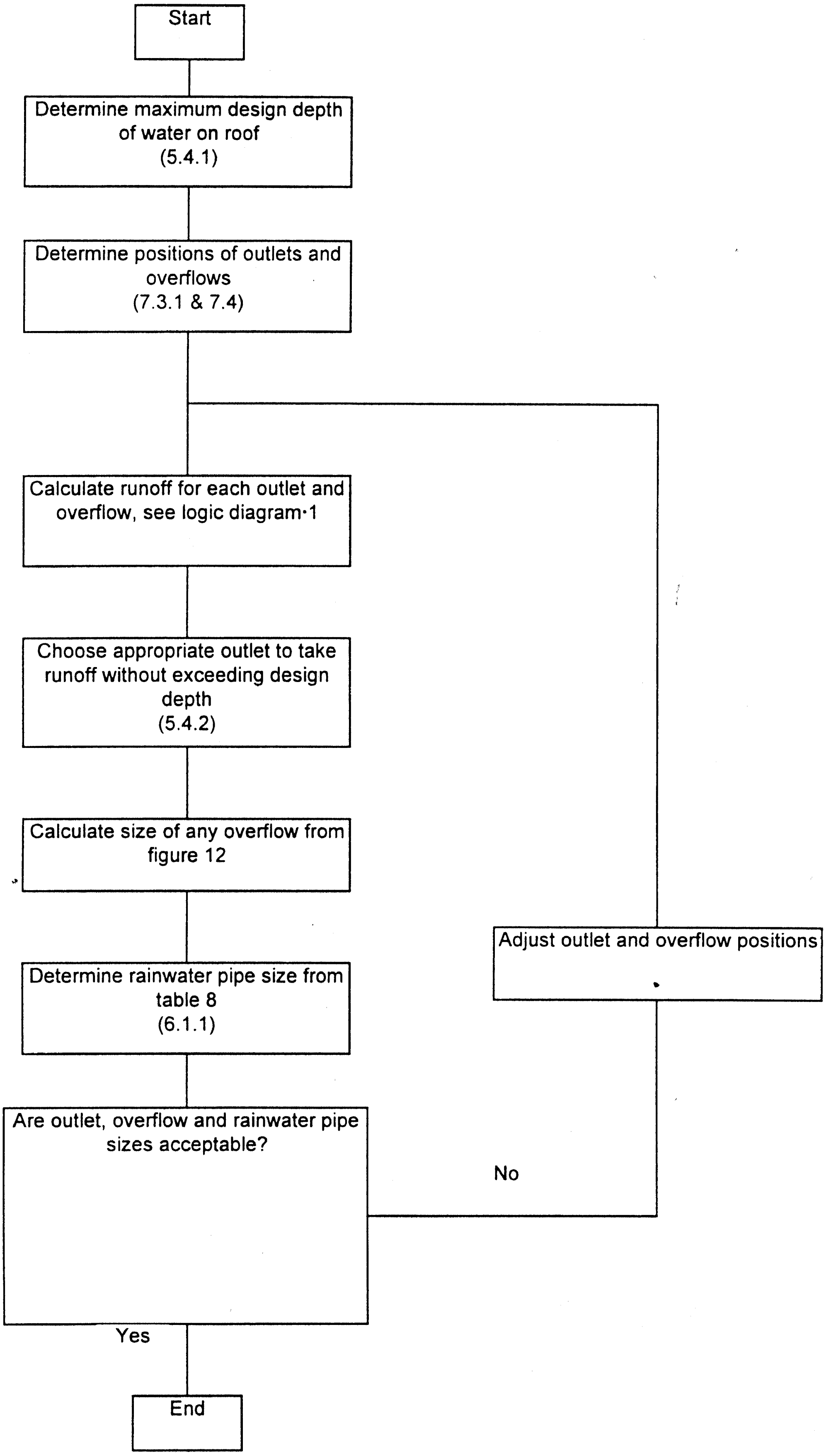

Logic diagram 4 — Eaves gutters

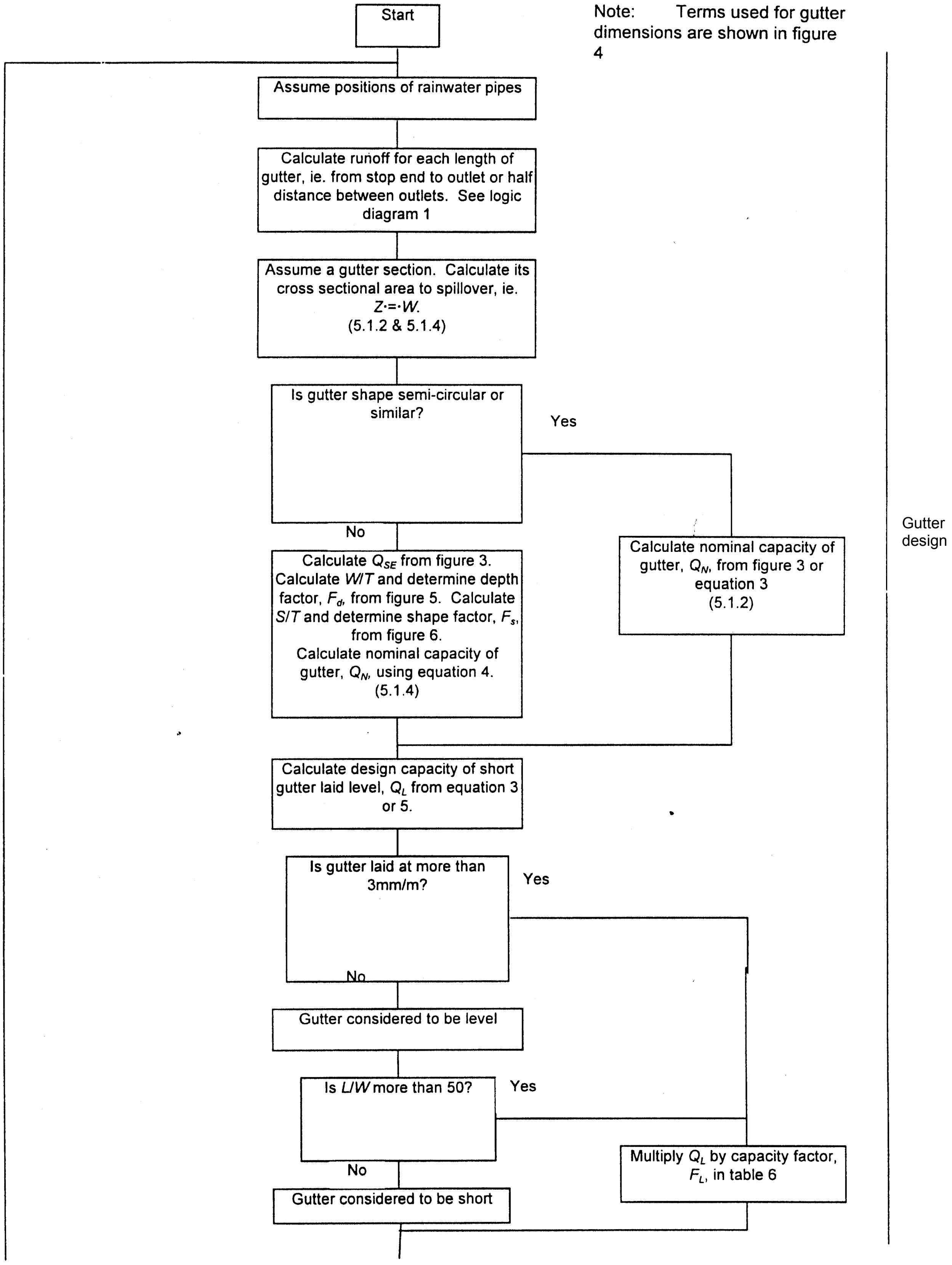

Note: Terms used for gutter dimensions are shown in figure 4

Logic diagram 4 — Eaves gutters (continued)

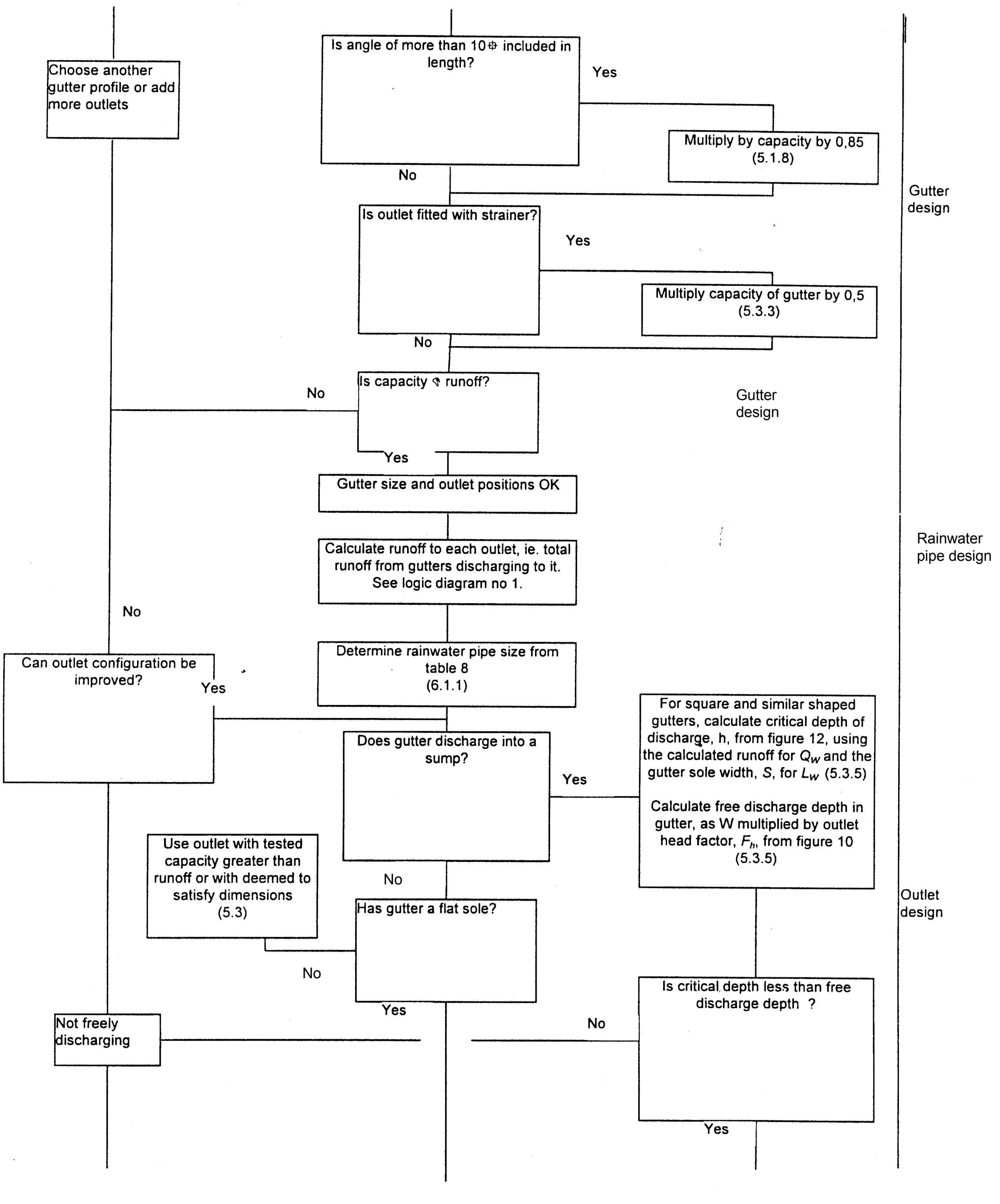

Logic diagram 4 — Eaves gutters (continued)

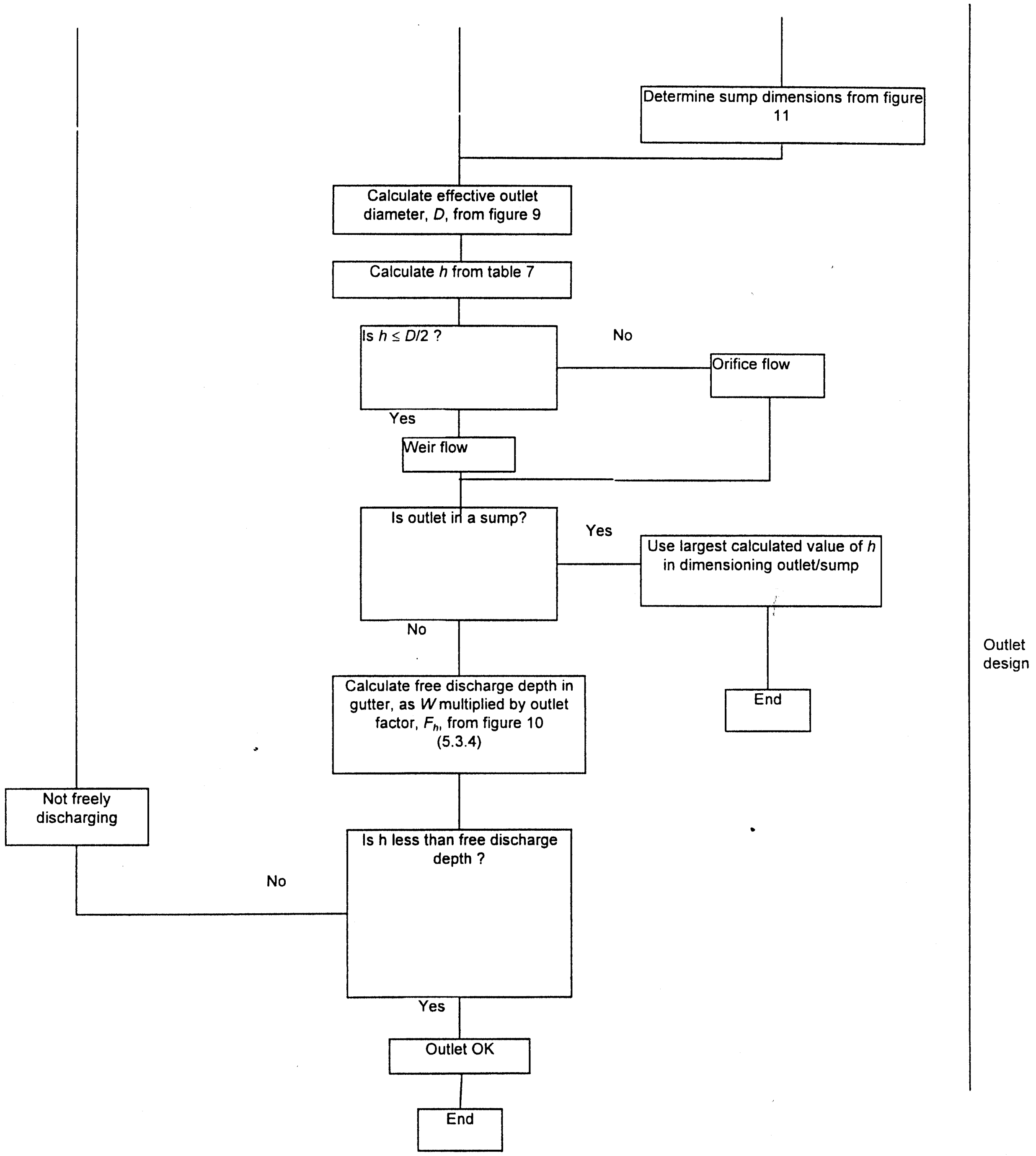

Logic diagram 5 — Valley and parapet gutters

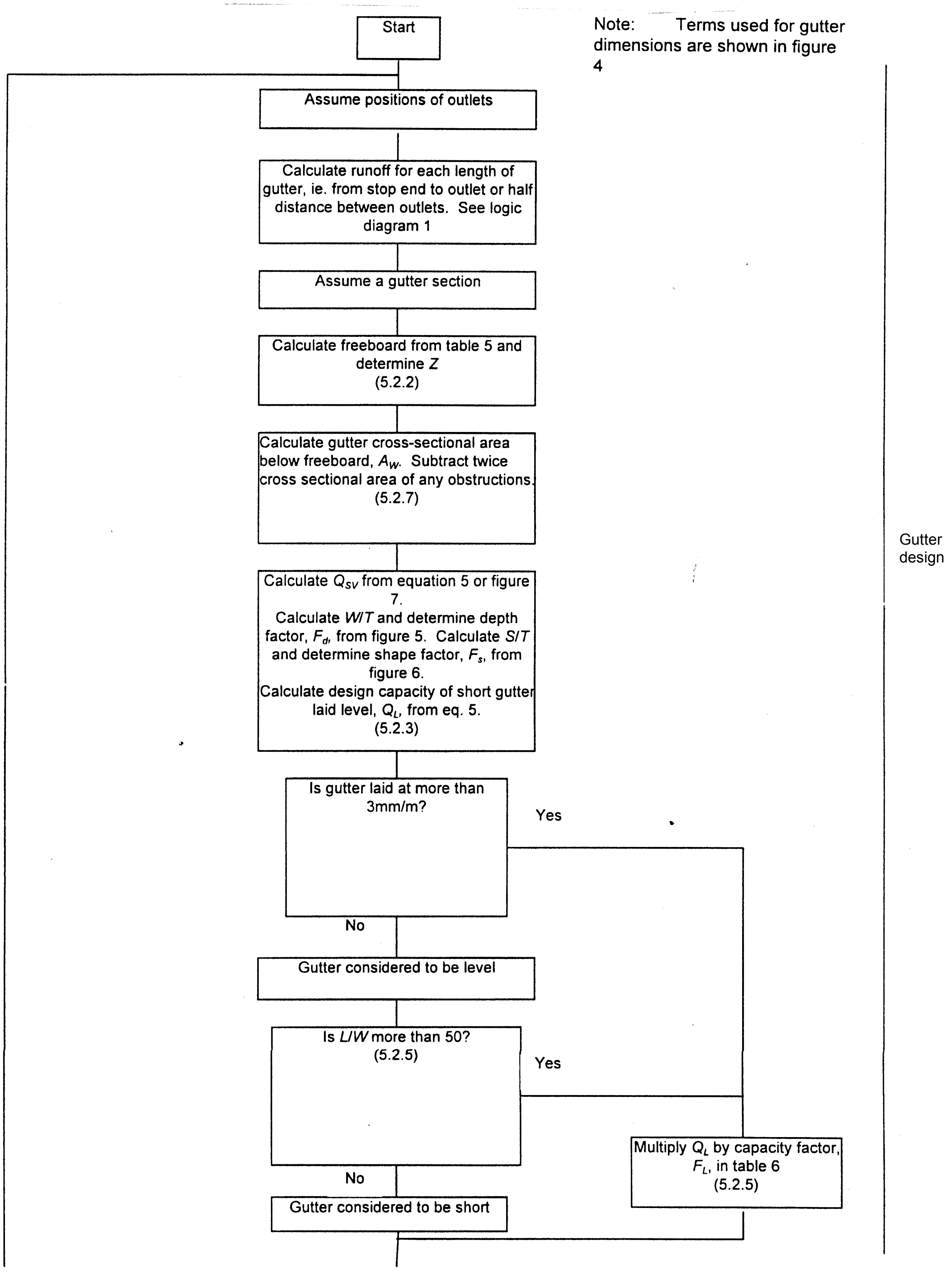

Note: Terms used for gutter dimensions are shown in figure 4

Logic diagram 5 — Valley and parapet gutters (continued)

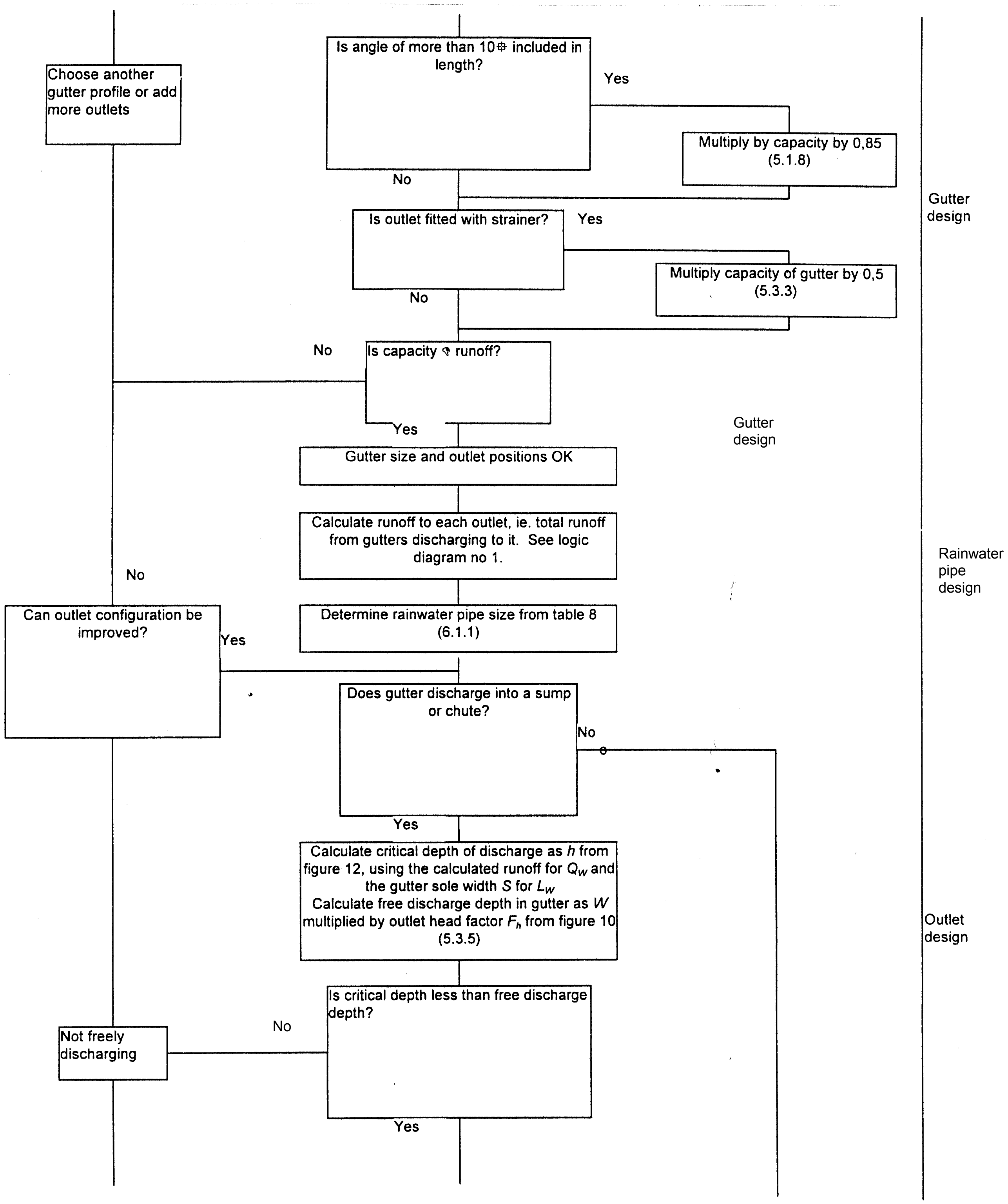

Logic diagram 5 — Valley and parapet gutters (continued)

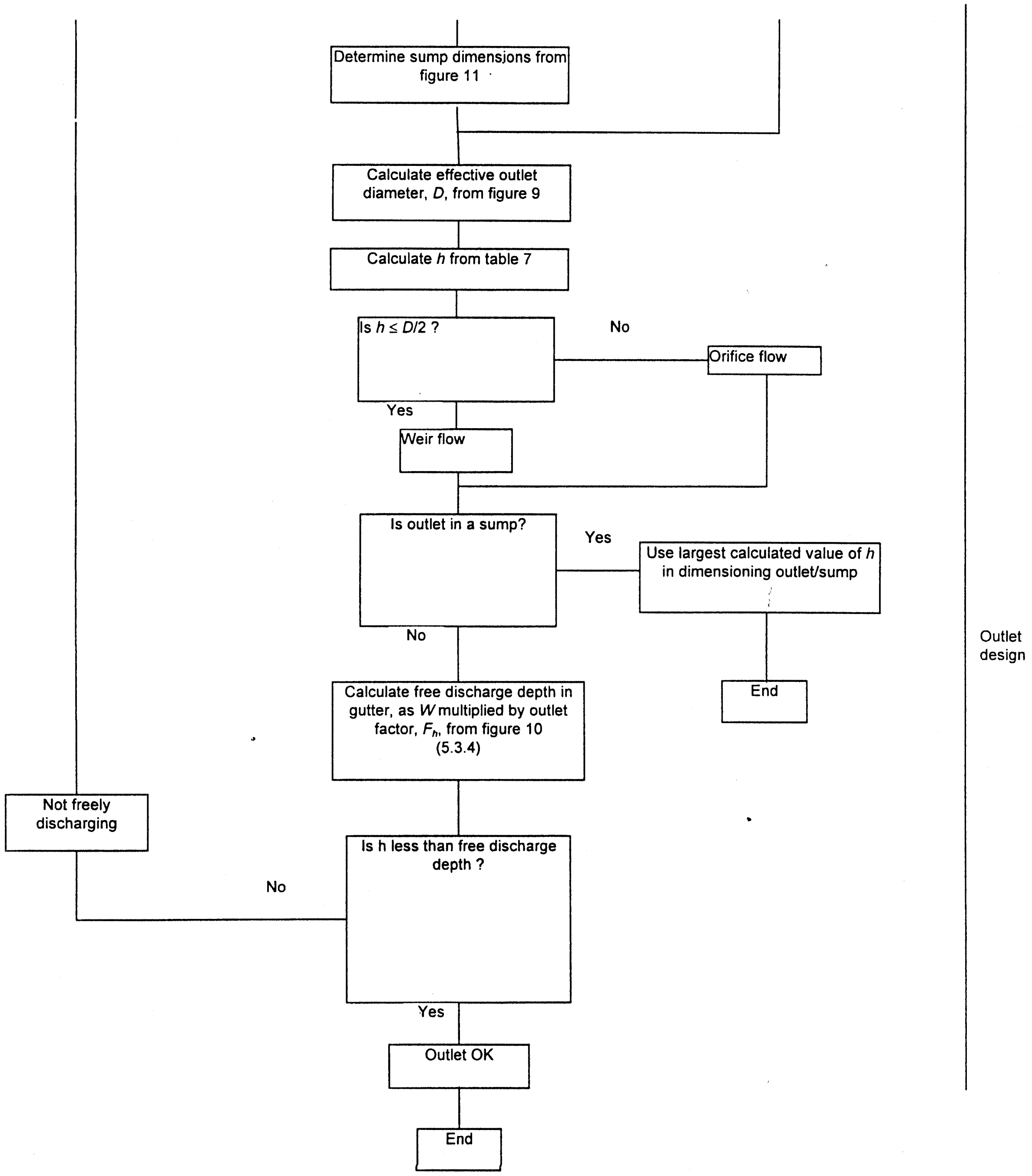

NATIONAL ANNEX NA (INFORMATIVE)

MATERIALS AND COMPONENTS FOR RAINWATER GOODS

NA.1 General

The main body of the text is material-independent. This annex gives advice on materials used in roof drainage systems. References in square brackets refer to clauses in the main body of the Standard.

Materials and components for rainwater goods, e.g. gullies, pipes, fittings and fixing accessories, should conform to appropriate European Standards or European Technical Assessments (ETAs). Where no relevant European Standard or ETA exists, British Standards or British Board of Agrément Certificates should be used.

Rainwater goods should be installed in accordance with manufacturer's recommendations.

The materials listed in a) to k) below have been widely and successfully used in roof drainage work. They have different physical characteristics that should be taken into account during handling and fixing and for each of these materials reference should be made to any relevant code of practice and to manufacturer's instructions. Materials should be used in sections that enable the system to withstand the maximum hydraulic head that could occur should a blockage take place at the lowest point. [see 7.6.4]

Bimetallic corrosion should be avoided.
All ferrous metals should be protected against corrosion.

a) *Aluminium*[1] Aluminium should be protected from contact with or run-off to or from cast iron, steel (including stainless), copper, alkaline concrete, mortar or plaster. Protect where necessary by powder coating, bitumen or other suitable coating. Paint or seal joints or overlaps. Give additional protection in heavily polluted atmospheres or where subject to salt spray.

b) *Fibre-cement* Disposal and mechanical working of asbestos-cement is subject to the provision of the Control of Asbestos at Work Regulations 1987. Any new fibre-cement goods should be asbestos free and precautions should be taken during cutting and drilling.

c) *Cast iron* Light-weight cast iron sections are usually supplied primed and heavy-weight sections are usually supplied with a bituminous coating. External pipes should be fitted with stand-off ears, spacing pieces or holderbats so that subsequent painting can be continuous around the pipe. Inside surfaces of gutters should be painted.

d) *Copper*[1] Copper should be protected by bituminous or other suitable coating from contact with or run-off from alkaline concrete, mortar or plaster. Unprotected copper may develop a green patina in the course of time which, however, is not generally harmful.

---

[1] These materials are suitable also for non-standard and decorative sections.

e) *Glass reinforced plastics (GRP)*[1] GRP can be formed in a variety of sections, including insulated sections for use in valley and parapet gutters.

f) *Lead*[1] Lead should be protected from contact with or run-off from porous concrete or mortar which will lead to the formation of a carbonate scale.

g) *Low carbon steel* Low carbon steel should be hot dip galvanized or stove enamelled.

h) *Unplasticized PVC (PVC-u)* The impact strength of unplasticized PVC reduces with temperature and care should be taken in handling at or below freezing point. Allow for a relatively high coefficient of thermal expansion.

i) *Stainless steel*[1] Avoid contact with or run-off from other metals, including cast iron and low carbon steel.

j) *Zinc*[1] Zinc should be protected by bituminous or other suitable coating from contact with or run-off from alkaline concrete, mortar or plaster.

k) *Polyethylene (PE)* PE should have frequent support to avoid sagging and has a high coefficient of expansion. If used externally, it should have UV stabilization.

---

[1] These materials are suitable also for non-standard and decorative sections.

NATIONAL ANNEX NB (INFORMATIVE)

METEOROLOGICAL ASPECTS

NB.1 General

In the UK the statistical meteorological data given in NB.2 to NB.5 should be used in conjunction with the design methods given in the main body of the text. Cross-references to the main text, where applicable, are given in square brackets.

When designing roof drainage systems it is normally impracticable to guard against very infrequent extremely heavy rainfall events. The design should achieve a balance between the cost of the roof drainage system and the frequency and consequences of flooding.

The capacity of roof drainage systems should be adequate to dispose of intense rainfall that usually occurs in summer thunderstorms.

The frequency and severity of the intense short duration rains are related to geographic location. Although upland areas of northern and western UK receive higher average annual rainfalls than lowland areas, it is in these lowland areas that very intense short duration rainfalls are more frequent.

NB.2 Rainfall intensity, *r* [see 4.2.1]

NB.2.1 Principles

The return period, T (in years), of a storm event can be defined approximately by the chance, $1/T$, that the event will be exceeded in any given year. It should be noted that $1/T$ does not exactly represent the chance of exceeding the chosen rate of rainfall in a given year but is a good approximation if T is more than 5 years. Since it may be the contents of the buildings that are at risk, this chance per year can be related to the consequences of damage to the contents.

The probability, P_r, of exceeding the chosen rate of rainfall during the lifetime of the building may be assigned a value between 0.0, representing assured safety, and 1.0, representing certainty that the rate will be exceeded. For values of return period equal to or greater than 5 years, P_r and T are approximately related by the equation:

$$P_r = 1 - [\, 1 - (1/T)\,]^{L_y} \qquad \ldots\ldots \text{(NB.1)}$$

where:

P_r is the probability of exceeding the chosen rate of rainfall during the lifetime of the building;
T is the return period of the chosen event, in years;
L_y is the anticipated life of the building or the period for which the contents need to be protected, whichever is being used as the drainage design criterion, in years.

For a given return period, the maximum rate of runoff will result from a storm event in which the duration of the peak intensity is equal to the time of concentration, which is the minimum time for the whole area of the roof to contribute flow to the point of discharge. A time of concentration of 2 min is considered typical for many roofs.

Four categories of design rate are proposed as follows.

> *Category 1.* A return period, T, of 1 year is the minimum that should be used for eaves gutters and flat roofs. Rainfall intensities for a 2 min event, within a storm of longer duration, are given in Figure NB.1.
>
> *Category 2.* For valley and parapet gutters or where a building or its contents should have an additional measure of protection, a return period, T, of $1.5 \times L_y$ should be used, corresponding to a probability, P_r , of 0.5. Rainfall intensities for a 2 min event, during a storm of longer duration, may be found using Figures NB.2 to NB.5.
>
> The map which has a return period equal to or greater than the design return period should be chosen. Greater accuracy is unnecessary.
>
> *Category 3.* If a higher degree of security than that provided by category 2 is desired, a return period, T, of $4.5 \times L_y$ should be used corresponding to a probability, P_r , of 0.2. The design rainfall intensity may then be found as in category 2.
>
> *Category 4.* Where there should be the highest possible security (P_r approaching 0.0), the maximum probable rainfall should be determined using Figure NB.5.

The maps in Figures NB.1 to NB.5 show the rainfall intensity, r, for 2 min duration storm events with return periods up to the maximum probable rainfall. Intensities should be interpolated for locations between contours.

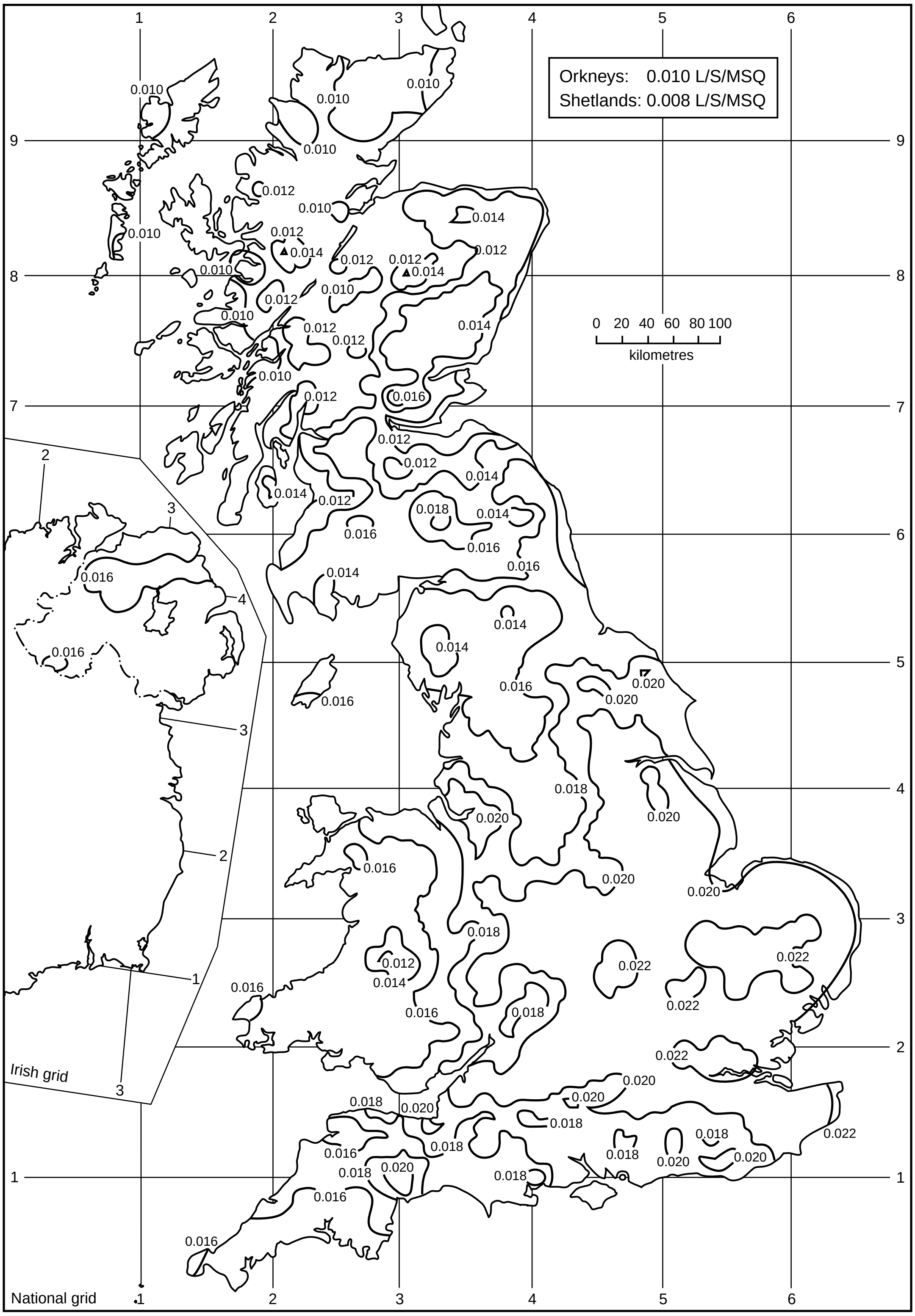

Figure NB.1 — Rainfall intensity, *r*, for a 2 min duration storm event with return period of 1 year (in l/s per m²)

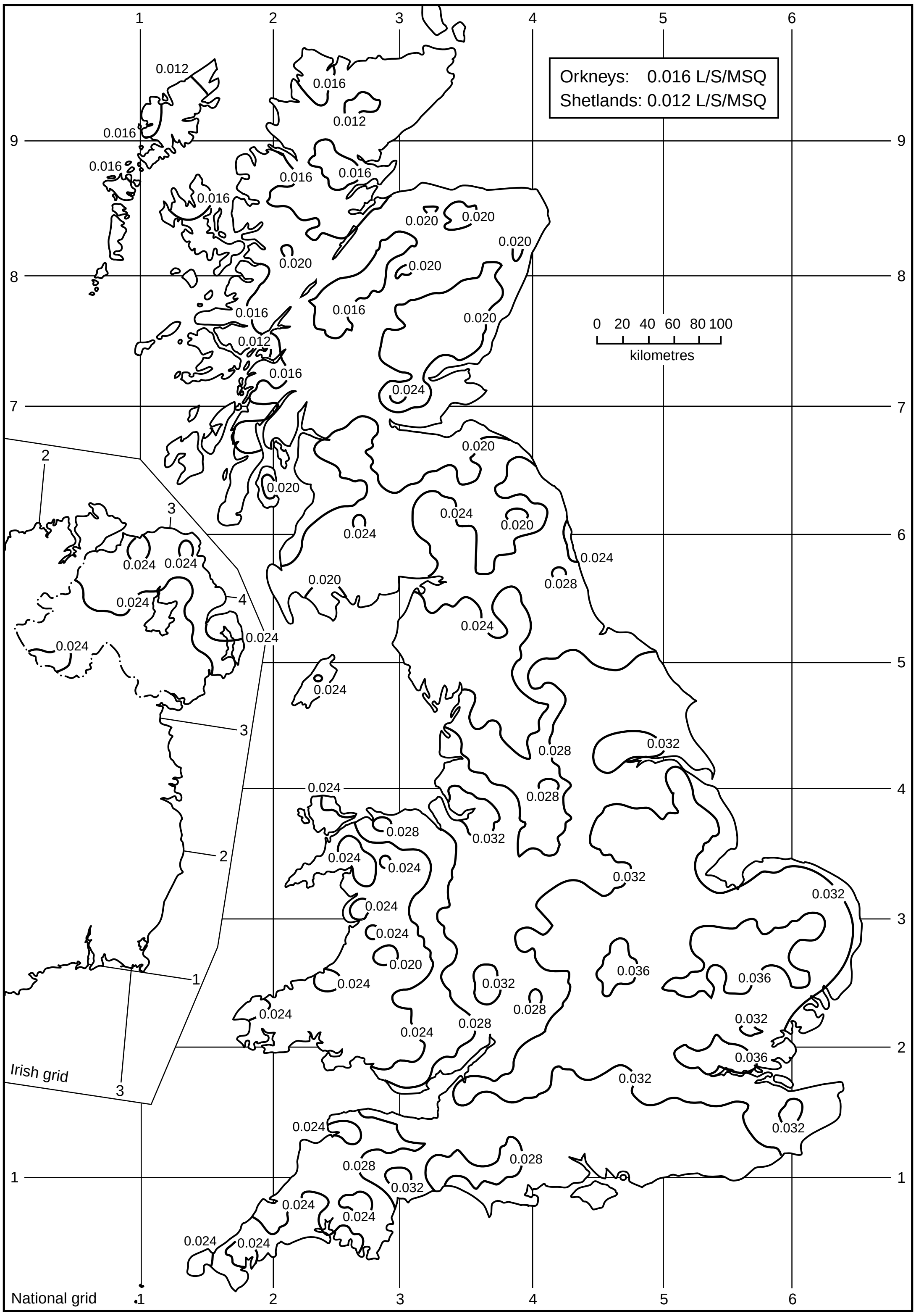

Figure NB.2 — Rainfall intensity, *r*, for a 2 min duration storm event with return period of 5 years (in l/s per m²)

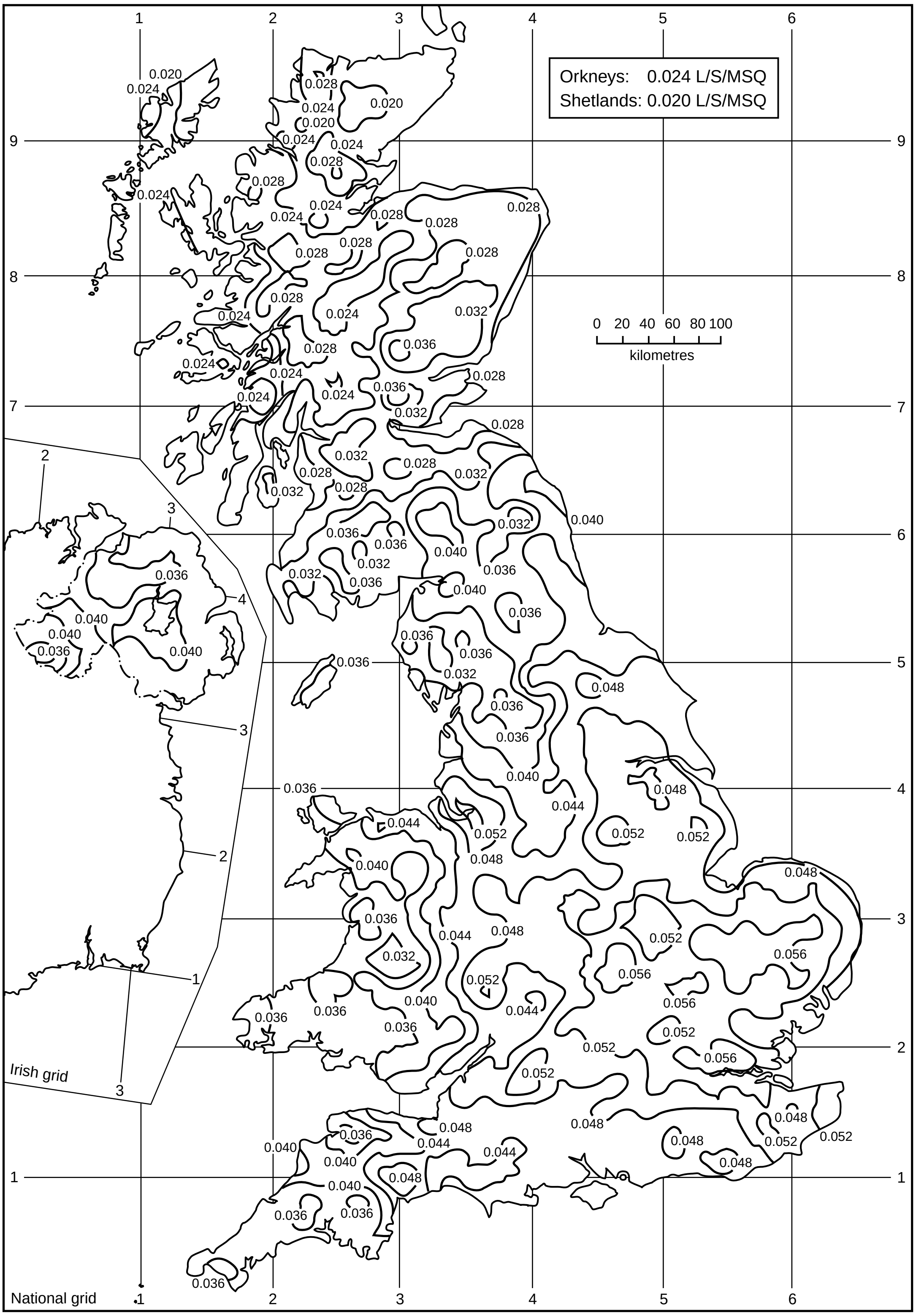

Figure NB.3 — Rainfall intensity, *r*, for a 2 min duration storm event with return period of 50 years (in l/s per m²)

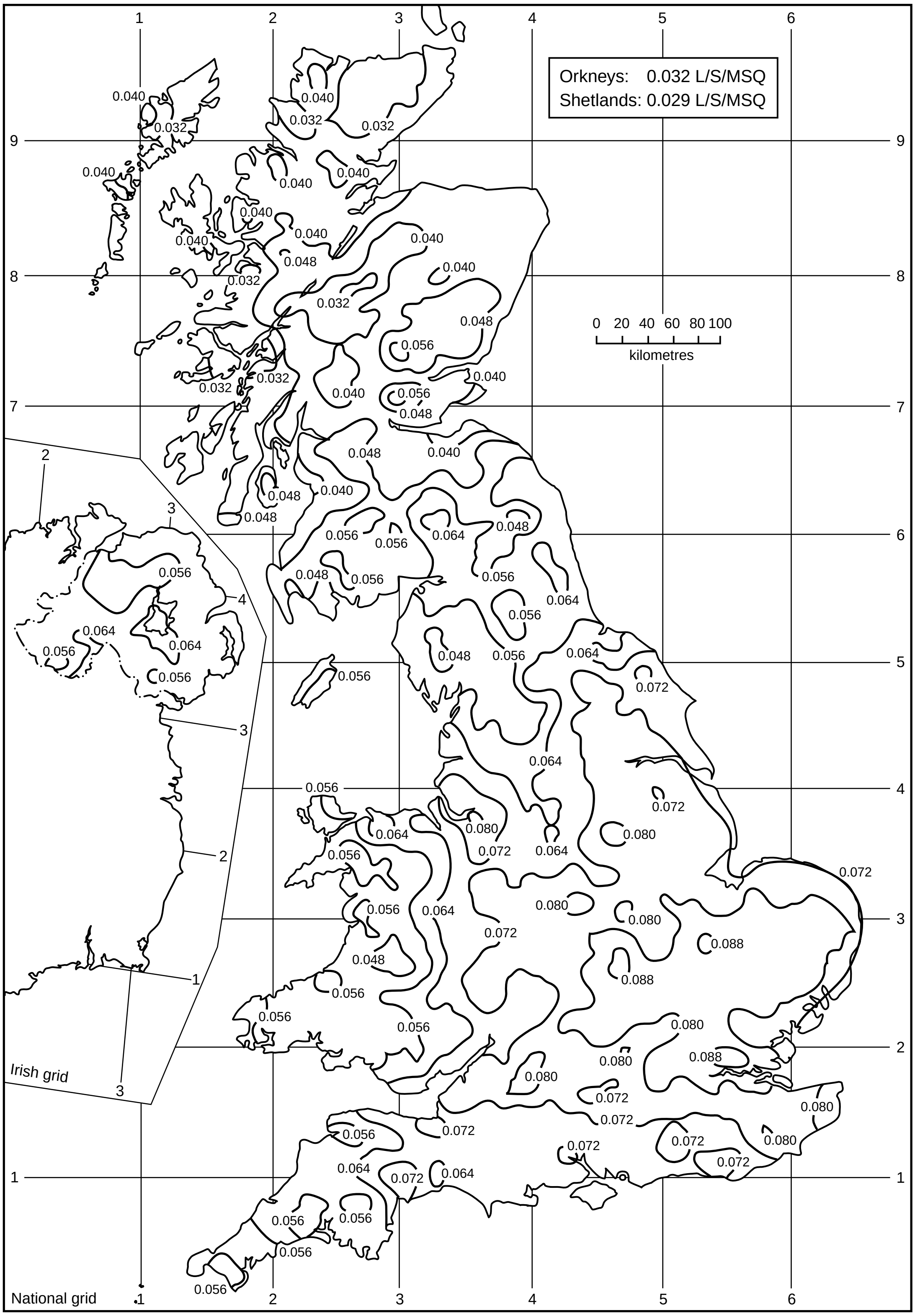

Figure NB.4 — Rainfall intensity, *r*, for a 2 min duration storm event with return period of 500 years (in l/s per m²)

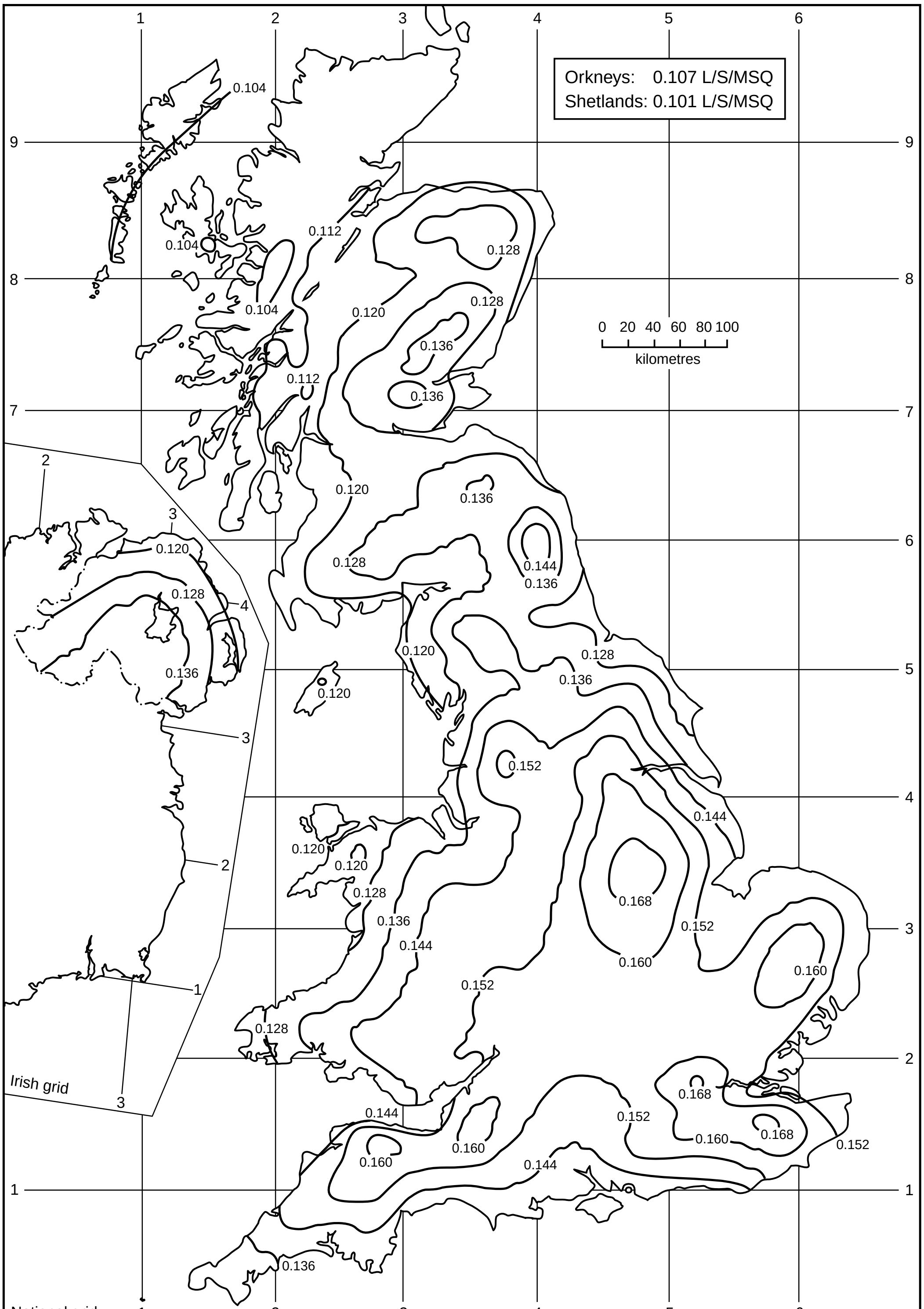

Figure NB.5 — Maximum probable rainfall intensity, r, for a 2 min duration storm event (in l/s per m^2)

NB.2.2 Estimation of rainfall intensity for different return periods and durations of storm event up to 10 min

The rainfall intensity for any return period and any duration of storm event between 1 min and 10 min for any geographical location may be estimated using the procedure below.

(a) Using Figure NB.6, estimate the depth of rainfall falling in 2 min storm event with a return period of once in 5 years (2 min M5), in mm.

(b) Using Table NB.1, obtain the M5 rainfall depth corresponding to the chosen duration (*D* min M5), in mm.

(c) Using Figure NB.7 and the *D* min M5 to calculate the depth of rainfall falling over duration, *D* min, for the required return period (*D* min M*T*), in mm.

(d) Calculate the rainfall intensity, *r* , in l/s per m² using equation NB.2

$$r = \frac{(D \text{ min M}T)}{D \times 60} \qquad \text{..... (NB.2)}$$

where

r is the rainfall intensity, in l/s per m²;

(D min MT) is the depth of rainfall falling in a storm event with return period T years and duration D min, in mm;

D is the duration of the storm event, in min.

Table NB.1 — M5 rainfall for different storm durations as a fraction of the 2 min M5 rainfall

Storm duration, *D* (min)	Fraction of 2 min M5
1	0.58
2	1.00
3	1.33
4	1.62
5	1.86
6	2.07
7	2.30
8	2.47
9	2.60
10	2.74

NB.2.3 Examples of procedure

NB.2.3.1 EXAMPLE 1. Determine the rainfall intensity to be used for the design of valley gutters for a light engineering works in the eastern part of Sheffield. It is estimated that the contents of the building need to be protected from rainwater for 40 years with a high degree of confidence.

From NB.2.1, it can be seen that the requirements are satisfied by category 3. Thus the return period, T, of the design storm is given by:

$$T = 4.5 \times \text{period for which contents need to be protected}$$

$$= 4.5 \times 40 = 180 \text{ years.}$$

From Figure NB.4, the rainfall intensity for a 2 min duration storm event with a return period of 500 years (which is greater than the required return period) is 0.80 l/s per m².

NB.2.3.2 EXAMPLE 2. If greater precision is sought (which is not recommended due to the inherent variability of rainfall) or if the time of concentration for the roof is not 2 min, the method given in NB.2.2 may be used.

Assuming a 3 min time of concentration, calculate the design rainfall intensity for the gutters described in example 1.

From Figure NB.6, the 2 min M5 depth of rainfall is 4.0 mm. From Table NB.1, the 3 min M5 depth of rainfall will be:

$$\begin{aligned}(3\text{ min M5}) &= \text{fraction} \times (2\text{ min M5})\\ &= 1.33 \times 4.0 = 5.32\text{ mm}\end{aligned}$$

Using Figure NB.7 for the recommended return period of 180 years,

$$\frac{(3\text{ min M180})}{(3\text{ min M5})} = 2.0$$

$$(3\text{ min M180}) = 2.0 \times 5.32 = 10.64\text{ mm}$$

Design rainfall intensity, r , for 3 min duration storm event with a return period of 180 years is:

$$r = \frac{(3\text{ min M180})}{3 \times 60} = \frac{10.64}{180} = 0.059\text{ l/s per m}^2$$

NB.3 Wind [see 4.3.3 and 4.3.4]

NB.3.1 Horizontal surfaces

No allowance for wind is recommended for the design of drainage of horizontal surfaces.

NB.3.2 Sloping or vertical surfaces

In the UK, sloping or vertical surfaces should be assumed to be subject to wind driven rain at an angle of 26° to the vertical (i.e. 2 in 1).

NB.4 Snowfall [see 7.2.2 and 7.7

Gutters designed for rainfall will have adequate flow capacity for the removal of melting snow. However, gutters and outlets can become blocked by frozen snow but this can be avoided by the use of trace heating or snowboards.

Snowguards may be fitted to the eaves of a pitched roof where sliding snow may cause injury to people or damage to structures below. Depending upon what is at risk, snowguards can be necessary for roof pitches up to 60° from the horizontal and they need not be higher than 300 mm for most situations. The fixings should be strong enough to withstand the forces calculated in accordance with BS 6399-3.

NB.5 Thermal movement

Supports and fixings to rainwater goods should allow thermal movement to take place and, in addition, expansion joints can be necessary.

Where structural expansion joints are provided in the building, expansion joints should be provided in the gutter to coincide.

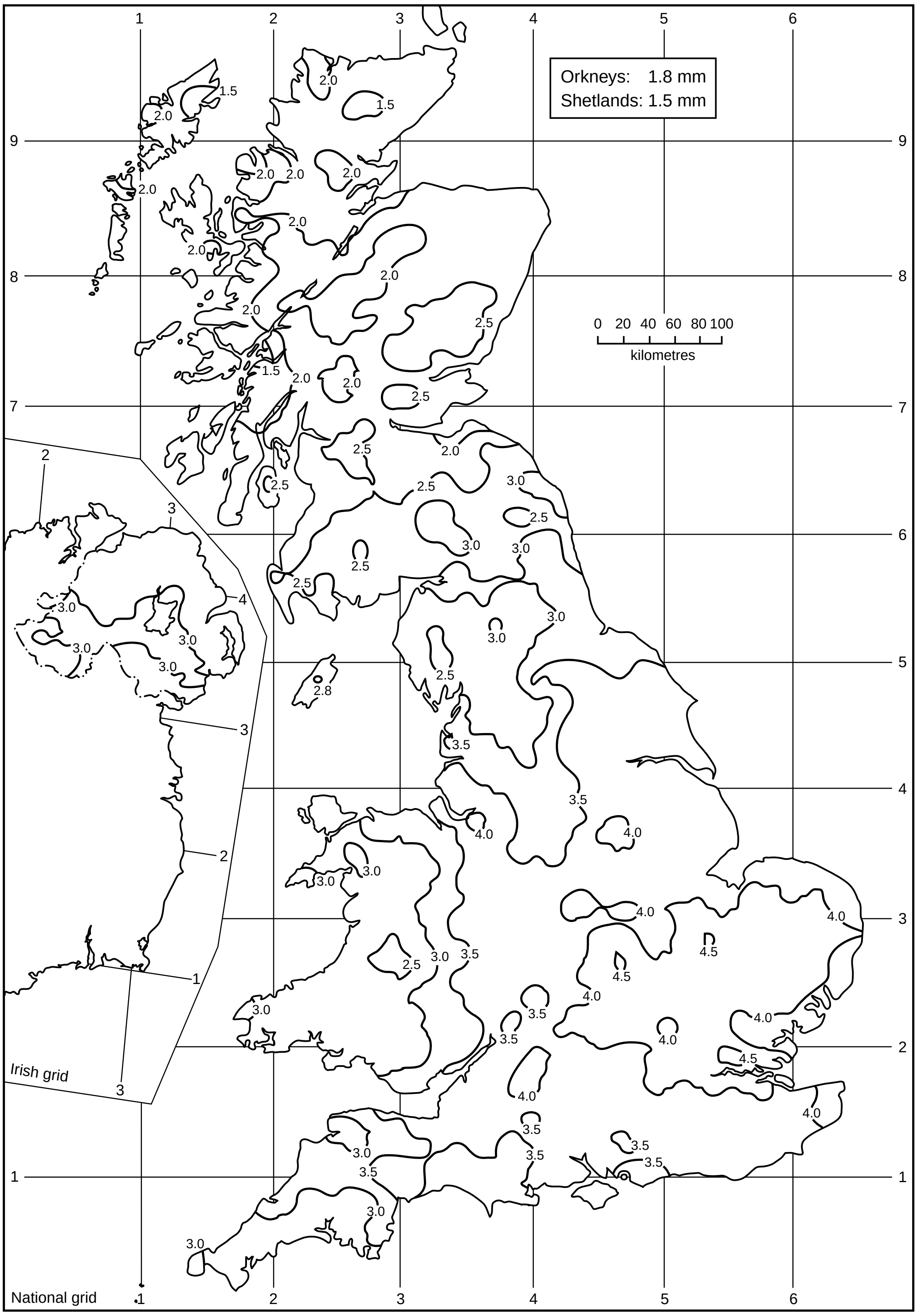

Figure NB.6 — Rainfall depth, in mm, for a 2 min duration storm event with return period of 5 years (2 min M5)

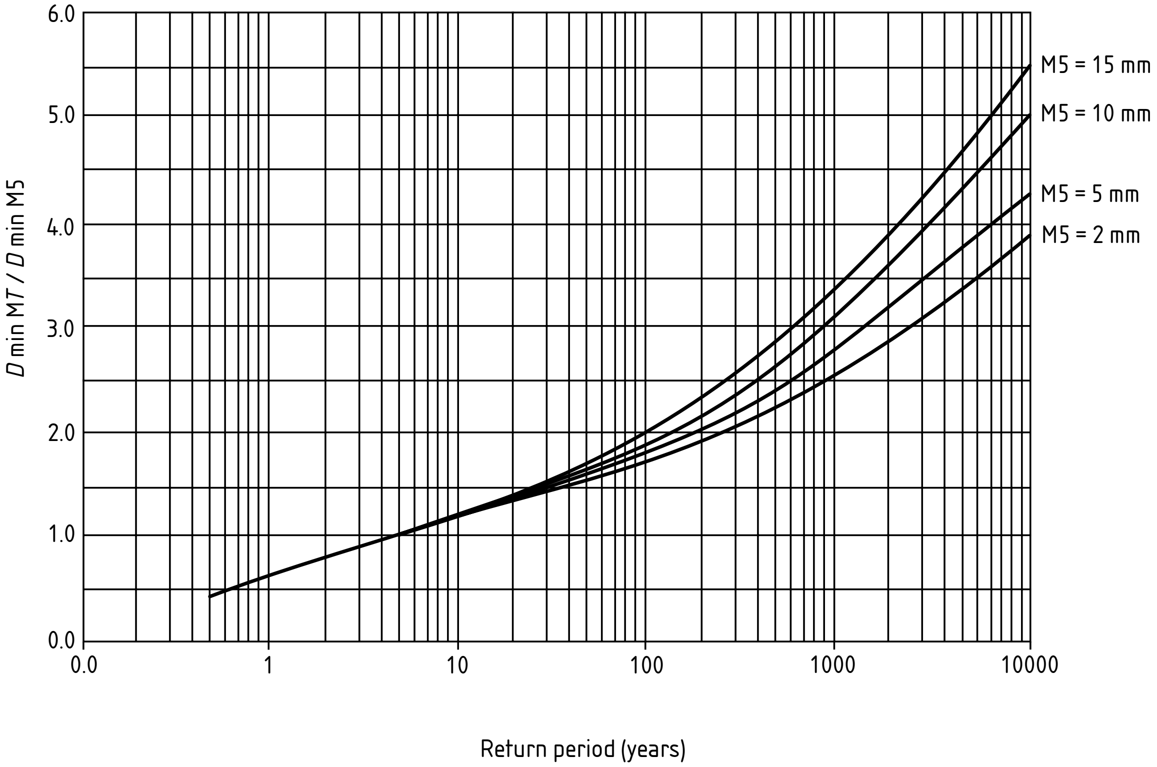

Figure NB.7 — Ratio of rainfall intensity for different return periods but for the same duration

NATIONAL ANNEX NC (INFORMATIVE)

EFFECTIVE CATCHMENT AREA

NC.1 General

This annex provides additional information and detail to complement clause 4.3 of the main text. References in square brackets refer to clauses in the main body of the Standard.

For normal UK design purposes it is assumed that rain is wind driven at an angle of 26° to the vertical (i.e. 2 in 1). Each gutter should be designed for the wind direction that will give the maximum flow in the gutter.

Air flow patterns around buildings can affect the local angle of descent of rain and particular consideration should be given to tall buildings and buildings in exposed positions.

NC.2 Flat roofs

The effective catchment area, *A*, of a flat roof is its plan area and should be calculated using equation 2 and is illustrated in Figure NC.1 a). Where sloping or vertical surfaces drain onto a flat roof, the additional area of catchment should be calculated in accordance with NC.3 and NC.4.

NC.3 Sloping roofs [see 4.3.3]

The effective catchment area, *A*, of a roof draining to an eaves or parapet gutter should be calculated using Table 3. This is illustrated in Figure NC.1 b).

For a valley gutter, one side of the roof will tend to be exposed to the wind and the other will tend to be sheltered. The method of calculating the effective catchment area is illustrated in Figure NC.1 c).

Runoff from any vertical wall should be added to the effective catchment area [see 4.3.4].

NC.4 Vertical surfaces [see 4.3.4]

The effective catchment area of a single wall should be taken as 50 % of its area [see 4.3.4], up to a maximum exposed height of 10 m.

Where two or more walls form an angle or bay, the direction of the wind should be assumed to be such that the walls considered together present the maximum vertical area to the rain, as illustrated in Figure NC.2.

For an enclosed area, the effective catchment area will be its plan area unless the surrounding walls are of unequal height. In the latter case, the value of *A* should be increased by half the area in elevation by which the higher wall exceeds the lower wall.

NC.5 Small roofs

Gutters and rainwater pipes may be omitted from a roof at any height provided that it has an area not exceeding 6 m² and no other area drains onto it.

NC.6 Tall buildings

Gutters and rainwater pipes may be omitted from tall structures where runoff would be dispersed before reaching the ground. Such runoff should be directed so as to avoid undesirable pattern staining and splashing of windows.

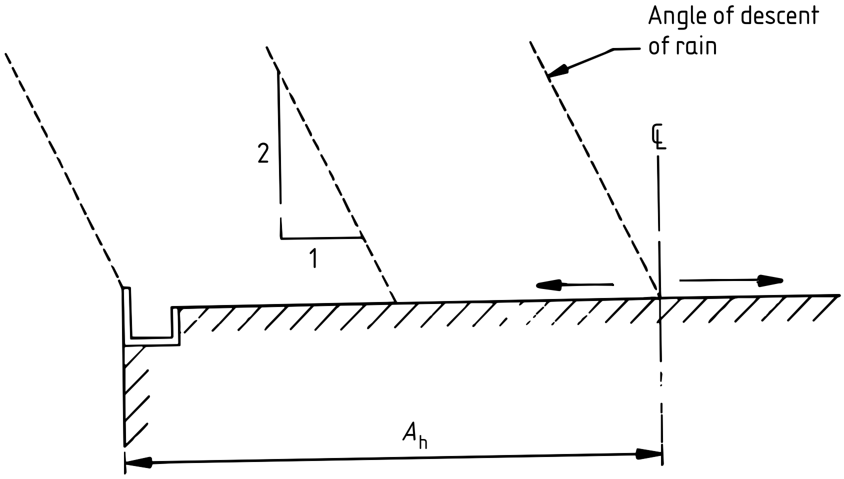

a) Flat roof: $A = A_h$

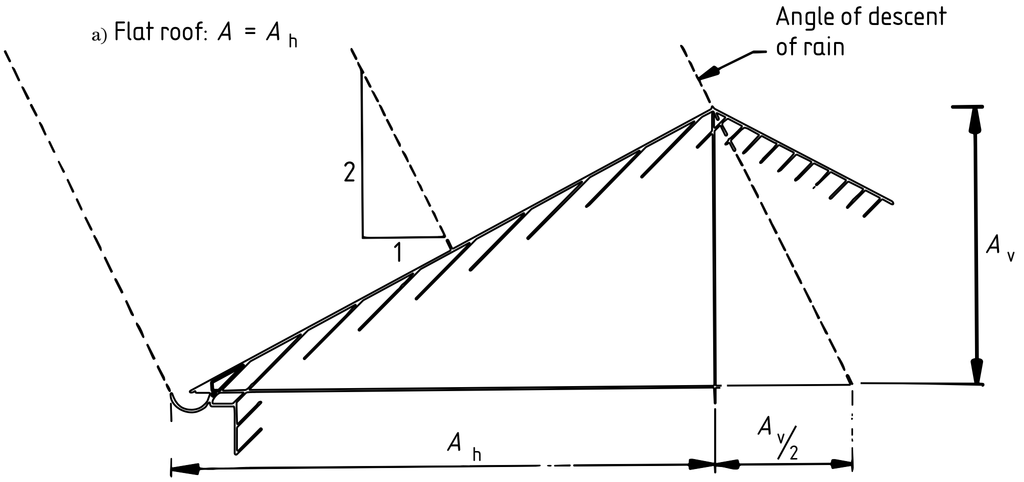

b) Sloping roof: $A = A_h + \frac{A_v}{2}$

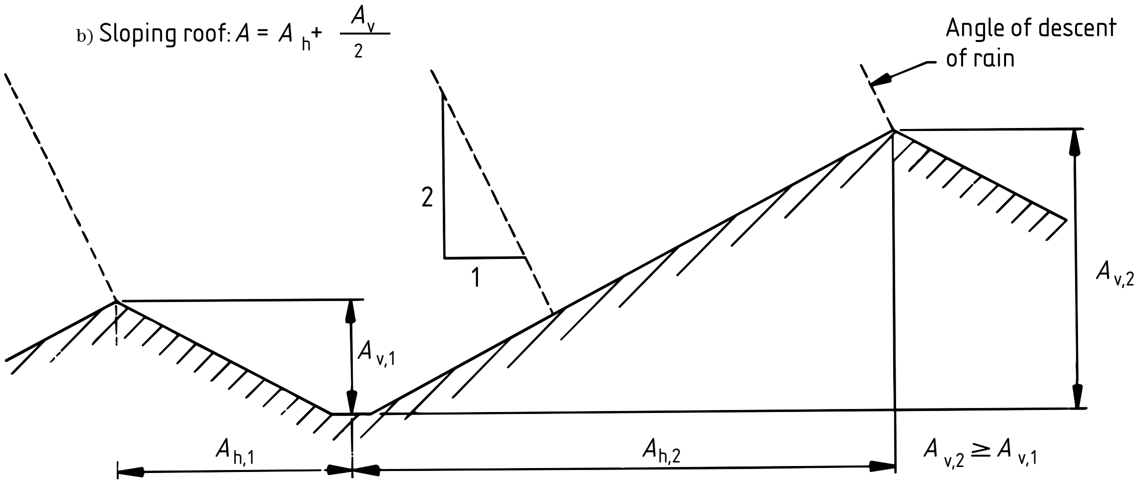

c) Valley gutter: $A = A_{h,1} + A_{h,2} + \frac{1}{2}(A_{v,2} - A_{v,1})$

Figure NC.1 — Calculation of effective catchment area, *A*, of flat roofs and sloping roofs

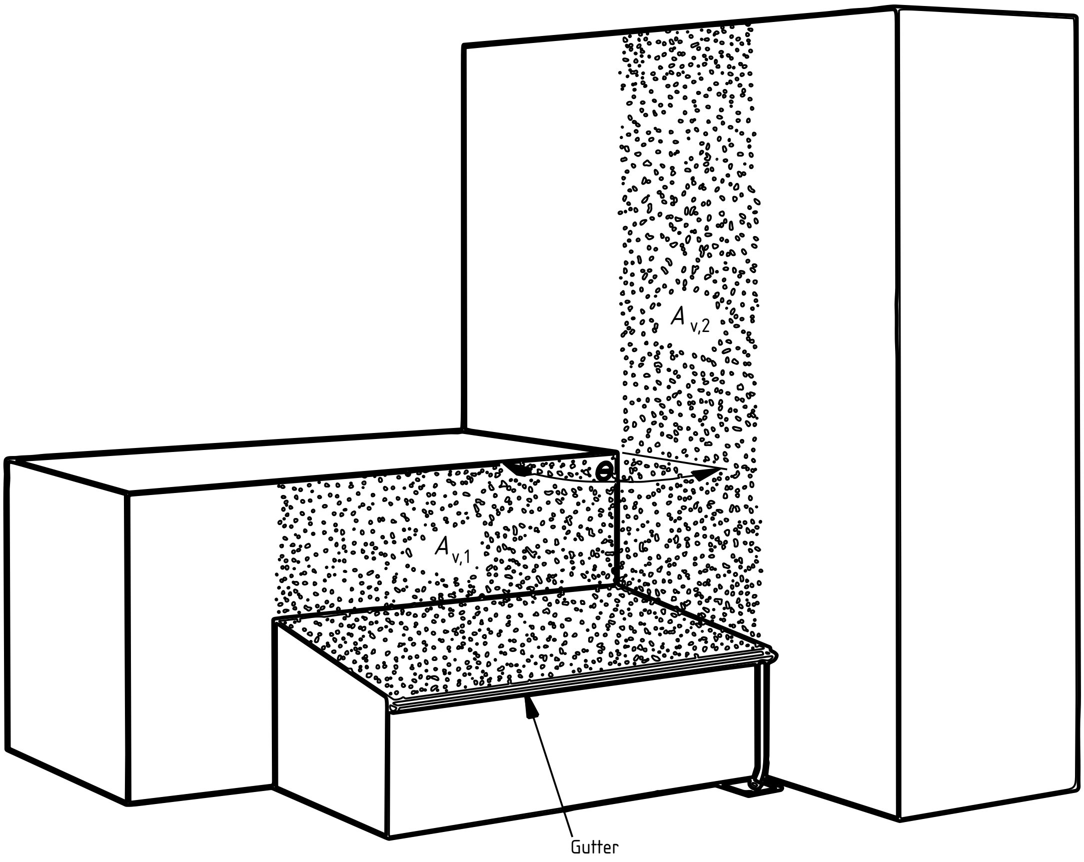

$$A = \frac{1}{2}\sqrt{\left(A_{v,1}^2 + A_{v,2}^2 - 2A_{v,1} \cdot A_{v,2}^2 \cos\theta\right)}$$

where $A_{v,1}$ and $A_{v,2}$ are areas of the vertical walls, as shown, contributing to the flow of the gutter

Figure NC.2 — Calculation of effective catchment area, *A*, of vertical surfaces

NATIONAL ANNEX ND (INFORMATIVE)

HYDRAULIC DESIGN

ND.1 General

This annex provides additional information to the main body of the text. References in square brackets refer to clauses in the main body of the Standard.

It covers the design of gutters with restricted outlets and positioning of outlets (which has a direct effect on gutter size).

ND.2 Position of gutter outlets

If a length of gutter is served by two outlets, the flow will split equally between them even if the flow does not enter the gutter uniformly along its length. Figure ND.1 a) shows how the flow at each outlet in a length of gutter can be calculated.

Figures ND.1 b) and c) show how the required size of a gutter is affected by the position of the outlets. For the arrangement shown in Figure ND.1 b), the outlets split the gutter into three sections; each gutter length needs to have a capacity of $Q/4$. Moving the outlets to the end of the gutter as shown in Figure ND.1 c) means that each gutter length needs to have a discharge capacity of $Q/2$.

For eaves gutters, an outlet should be located, where practicable, near to each angle.

For valley and parapet gutters an outlet should be positioned so that the direction of flow is not changed sharply (e.g. through 90° just before reaching it). Where overflowing of a gutter cannot be tolerated, a minimum of two outlets should be provided [see 7.4]. It may also be necessary either to provide a weir overflow at the end of the gutter, discharging outside the building, or to design for a rate of rainfall that corresponds to a high degree of security (see NB.3.1).

ND.3 Gutters with restricted outlets

ND.3.1 General

The methods given in the main text for calculating the capacities of gutters and outlets are based on the assumption that the outlets will be made large enough to allow the gutters to discharge freely and thereby achieve their maximum flow capacities.

For nominally level valley and parapet gutters which have outlets connected directly to the sole, smaller outlets can be used that cause a partial restriction of the flow in the gutter. Allowing restricted flow can enable use to be made of surplus flow capacity in gutters whose dimensions may be determined by maintenance or structural considerations rather than by hydraulic requirements.

Eaves gutters should not be designed for restricted discharge because the lack of freeboard makes them more sensitive to any design errors or minor blockages. For similar reasons, sloping gutters and gutters with a side outlet should not be designed for restricted discharge. Outlets for eaves gutters and for all types of sloping gutter should be made large enough to allow free discharge using the design method described in clause 5.

ND.3.2 Determination of free or restricted discharge

Where the dimensions of gutters and outlets have been determined, the limiting flow capacity of the system may be calculated by the following method.

If an outlet receives flow from two gutters (with drainage lengths L_1 and L_2 and effective catchment areas A_1 and A_2 respectively), it is assumed for the purpose of the following calculations that A_1 is larger than or equal to A_2.

a) Use clause 5.2 to calculate the flow capacities (Q_1 and Q_2) of the two gutters, assuming free discharge and allowing for their length/depth ratios and for any angles, obstructions, etc.

b) For gutter length L_1 (draining the larger catchment area A_1) use Figure 10 to determine the maximum head ($h_1 = F_h W$ where W is the maximum allowable flow depth in the gutter) over the outlet for free discharge. Then calculate from Table 7 the corresponding flow rate (Q_O) that can be discharged by the outlet.

c) If $Q_O \geq Q_1 + Q_2$, the outlet is large enough not to restrict the discharge and the gutters will be capable of achieving their maximum flow capacities, Q_1 and Q_2 (i.e. free discharge).

d) If $Q_O < Q_1 + Q_2$, the outlet will restrict the discharge and the procedure in ND.3.3 should be used to calculate the limiting flow capacities of the outlet and of the lengths of gutter that it drains.

If only one length of gutter drains to the outlet, all quantities relating to gutter length L_2 should be set equal to zero.

ND.3.3 Design procedure

To determine the head, h_R , over the outlet for restricted discharge and the corresponding flow capacities of the gutters, use the following iterative procedure.

a) Assume a value for h_R between h_1 (the limiting head for free discharge found in ND.3.2) and W.

b) Calculate the value of the flow restriction factor, F_R , given by:

$$F_R = \left(\frac{h_1}{h_R}\right)\left(\frac{W - h_R}{W - h_1}\right)$$

c) Use Table 7 to calculate the discharge capacity, Q_{OR} , of the outlet corresponding to the head, h_R , for restricted flow.

d) Use Figure ND.2 and the value of F_R from step b) to find the value of the ratio Q_{1R}/Q_1, where Q_{1R} is the restricted flow capacity of gutter length L_1 , and Q_1 is its maximum capacity if it were able to discharge freely (as calculated in ND.3.2). Hence calculate Q_{1R} .

e) Based on the ratio of the catchment areas drained by the two gutter lengths, the combined flow rate, Q_C , from the gutters will be: $Q_C = Q_{1R} (A_1 + A_2)/A_1$.

f) If the combined flow rate Q_C from the gutters is equal to the discharge capacity, Q_{OR} , of the outlet calculated in step c) , then the assumed value of outlet head, h_R , in step a) was correct. If the values are not equal, assume a new value of h_R and repeat the procedure repeated until a sufficiently close agreement is achieved. The limiting flow rates in the gutters for restricted flow are Q_{1R} in length L_1 and $Q_{2R} = Q_{OR} – Q_{1R}$ in length L_2.

g) In order to determine if the system meets the design requirements, compare the calculated capacities of the gutters and the outlet with the corresponding values of run-off produced by the design rainfall intensity.

If only one length of gutter drains to the outlet, set all quantities relating to gutter length L_2 equal to zero.

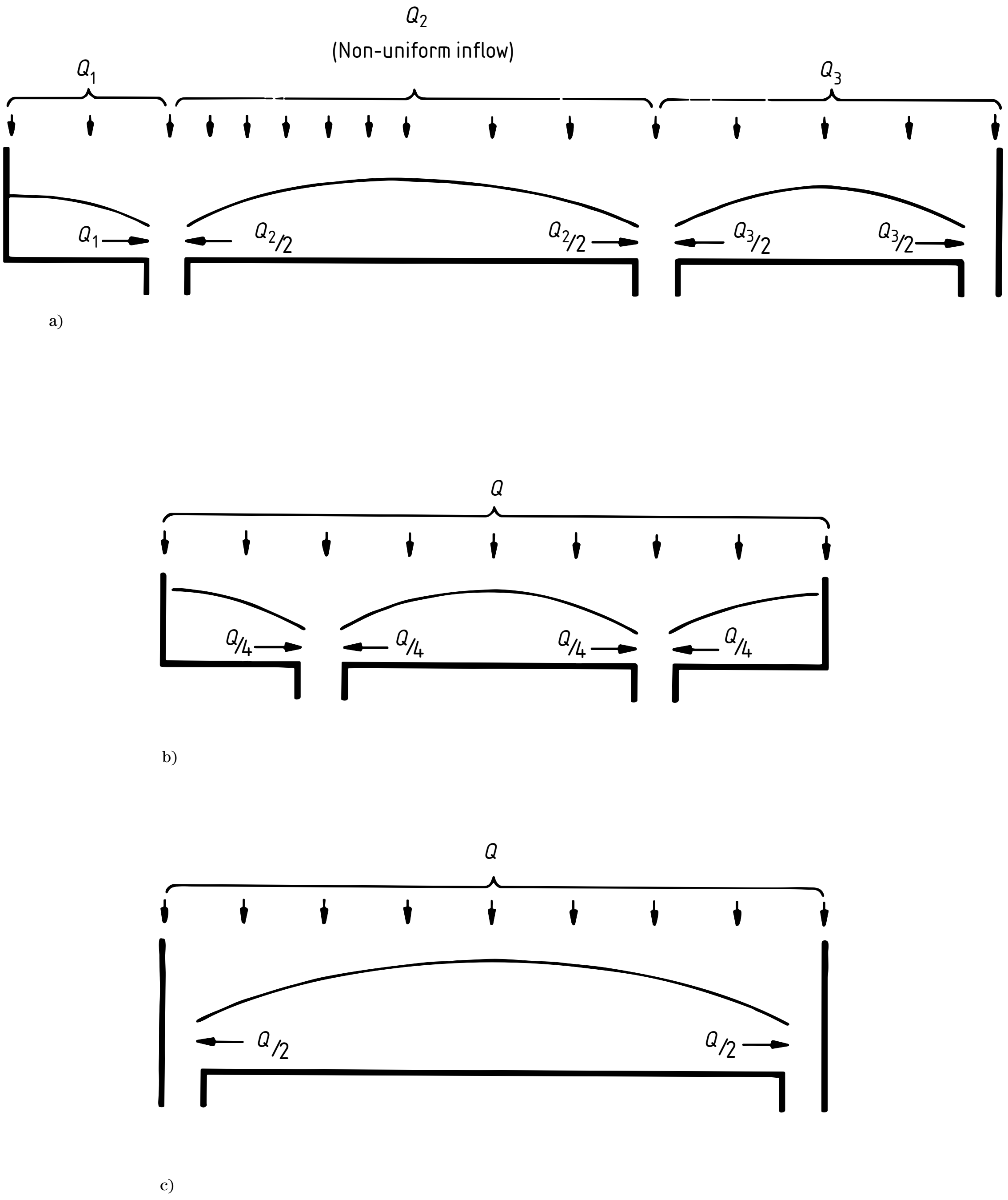

NOTE: For the same total flow, the gutter in (c) requires twice the capacity of the gutter in (b)

Figure ND.1 — Division of flow between gutter outlets

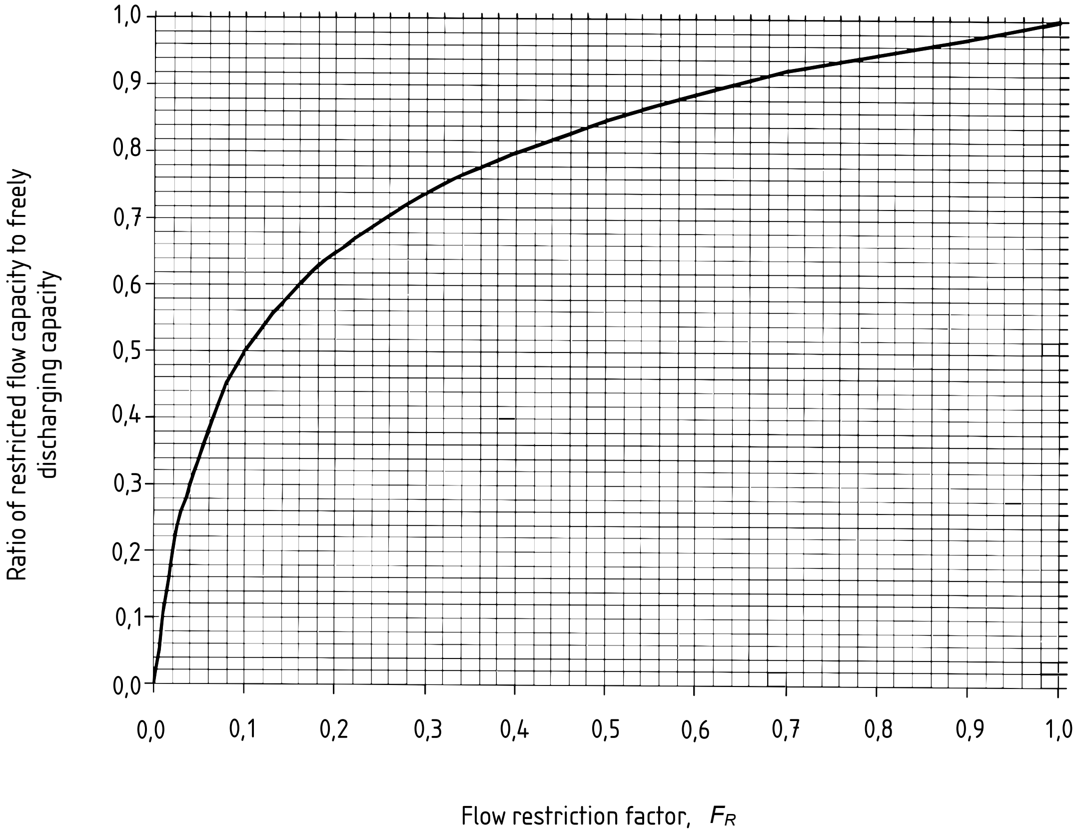

Figure ND.2 — Ratio of restricted flow capacity to freely discharging capacity

NATIONAL ANNEX NE (INFORMATIVE)

LAYOUT, INSTALLATION, INSPECTION, TESTING AND MAINTENANCE

NE.1 General

This annex gives further details to complement the main body of the standard. References to the main body of the test are given in square brackets.

NE.2 Layout

NE.2.1 Gutter location [see 7.2.1]

The spread of water as it leaves the roof edge depends on the rate of rainfall, the roof covering and the pitch of the roof. The most satisfactory roof edge is one with the upper corner rounded and the lower corner sharp.

Gutters should be fixed in such a position that they intercept the flow from the roof (see Figure NE.1); in the absence of any other information on the runoff characteristics of the roof, the gutter should be fixed centrally under the roof edge and close beneath it.

NE.2.2 Eaves gutters

Roof felting should be extended to just below the top edge of the gutter to prevent wind blowing water behind the gutter. The roof covering should not extend so far into the gutter as to prevent easy cleaning and maintenance.

Gutters should be adequately supported so as to prevent sagging and ponding. Sagging causes back-falls which reduce the gutter capacity; ponding reduces the durability of the gutter. Care should be taken to ensure that there is no sideways tilt of the gutter as this reduces the gutter capacity.

Eaves gutters are usually supported by means of fascia or rafter brackets that should be fastened with corrosion-resisting wood screws of minimum size 25 mm long x 5 mm, and fitted not more than 1 m apart. Special restraining brackets should be used to prevent the gutter being dislodged by ladders or strong winds. Additional brackets should be fitted to or near angles and outlets to prevent sagging.

With unplasticized PVC gutters having sockets as integral parts of the gutter, support brackets should be arranged so that one is fixed not more than 150 mm from the socket end of the gutter. Plain-ended PVC-u gutters should have union clips which may incorporate a bracket. Union clips not incorporating a bracket will need a support bracket close to each side of the union clip. Support brackets for PVC-u are of two types: one integral with a socket and the other a simple clip fixing for intermediate support.

Where ogee and other moulded gutters are not supported by brackets, screw fixing through the back of the gutter is sometimes used but not recommended. Wherever this method is employed, the front overspill level of the gutter should be below the level of the fixing screws. Moulded or box gutters may also be supported by brick or stone cornices, in which case dampness of the structure should be prevented by the provision of damp-proof courses behind and under the gutter.

Where eaves gutters occur on industrial buildings, fixing to or through corrugated wall cladding materials can need special brackets and fixings.

Box receivers are preferable to the use of sole outlets as they reduce the risk of overtopping. However, this is generally not practicable.

NE.2.3 Valley, parapet and boundary-wall gutters

Gutters should be large enough to enable a person to walk along them for maintenance purposes; for valley gutters the recommended minimum top width is 500mm and for parapet and boundary wall gutters 300mm. The sides of valley gutter should have the same slope as the roof; they may be vertical above the designed top water level to provide the required freeboard.

Supports should be provided to allow adjustment to enable gutters to be laid to the design fall and to avoid ponding [see 7.1]. Where supports are subject to deflection under dead and live loads from the roof, adjustable brackets and supports are recommended. Two such supports should be fitted to each length of gutter, except for gutters designed for unusually long spans when the manufacturer's recommendations should be followed.

Box-receivers are preferable to sole outlets; side outlets should not be used. The design of the structural framework should take account of any internal box receivers.

NE.2.4 Box-receivers [see 5.3.4 and Figure 11]

Dimensions of box-receivers need to be large enough to allow the flow to discharge freely from the gutter to which it is connected. Typical designs for box-receivers are given in Figure 11.

The minimum width of the box should be not less than the width of flow in the gutter at a depth equal to half the overall depth of gutter, Z. If flow enters the box-receiver from only one direction, the length of the box in the direction of flow should be not less than 0.75 W. If the flow enters from opposite directions, the length of the box should be not less than 1.5 W. The top of the box should be level with the top of the gutter except where the box is external to the building, when the outer edge of the box may be lowered to act as an emergency overflow.

NE.2.5 Gutter outlets

Gratings are always a potential source of blockage and should only be used on non-siphonic gutter outlets as a safety measure for openings or to prevent loss of loose roof covering.

Outlets connected to the sides of gutters are inefficient and their use is not recommended.

NE.2.6 Overflow weirs

Overflow weirs are used to discharge water clear of a building when the flow in a gutter exceeds the design rate or when a partial or complete blockage occurs at an outlet.

Overflow weirs may be installed at either the upstream or downstream ends of the gutter.

An upstream overflow is illustrated in Figure NE.2. The crest of the weir needs to be above the design depth of flow in the gutter at the upstream end. At the design rate of flow, such overflows do not generally have sufficient capacity to prevent the gutter overflowing along its length if a complete blockage occurs at the outlet.

A typical downstream overflow is shown in the upper diagram of Figure 11. This has the advantage that it can discharge the whole flow from the gutter if the outlet should become completely blocked.

NE.2.7 Rainwater pipes.

Where used externally, joints on vertical spigot and socket rainwater pipes are generally left unsealed with the exception of the joint between the gutter outlet and the rainwater pipe. Metal pipes left unsealed should be wedged to prevent rattle.

Where internal rainwater pipes are connected to an outlet situated in a flat roof formed of metal decking, allowance should be made in the joint between the rainwater pipe and roof outlet for differential movement due to roof deflection.

Rainwater pipes may be fixed by ears cast, bolted or welded to the pipe sockets or by loose holderbats, screwed or built in, one to each length of pipe. Where pipes exceed 2 m in length, an intermediate holderbat should be fitted. All holderbats should be adequately protected against corrosion. Pipes that require painting should be fixed at least 30 mm clear of the building structure using spacers or projecting ears. Where there is a risk of damage the pipes should be protected. Pipes should be fixed with screws into suitable wall plugs or with purpose-made pipe nails. Materials for fixings and holderbats should be selected to avoid electrolytic action.

NE.2.8 Horizontal rainwater pipes in non-siphonic systems [see 6.1.2]

Where practicable, horizontal lengths of pipe should be given a small fall to prevent ponding of water. Long lengths of pipework should be designed as a drain [see 6.3].

Calculations should be made to determine whether the horizontal pipe flows full at the rates of flow used in the design of the gutter and its outlets; if the pipe does flow full, the water levels in the connections between the gutter outlets and the horizontal pipe should be calculated (see Figure NE.3).

Frictional losses can be determined using any established hydraulic equation, such as the Colebrook-White equation (using a value of surface roughness of 0.15 mm). Minor losses due to bends and tees etc. can be calculated using equation NE.1:

$$H_m = \zeta \frac{v^2}{2g} \qquad \text{..... (NE.1)}$$

where:

H_m is the minor head loss (m);
v is the velocity in the pipe or fitting (m/s);
g is the gravitational constant = 9.81 m/s²;
ζ is a dimensionless head loss factor (see Table NE.1).

Table NE.1 — Minor loss factors

Fitting	ζ
90° bend	0.5
45° bend	0.3
90° tee	0.5
45° tee	0.3
Taper	0.3

Calculations should begin at the downstream end of the horizontal pipe where the pipe should be assumed to be just flowing full. If the hydraulic gradient lies above the soffit of the pipe, the pipe will be surcharged and water will back up in the connections between the gutter and the horizontal pipe. If the level of the water surface in such a connection is higher than the base of the inlet to the rainwater pipe, the flow may back up in the gutter or box-receiver to which the inlet is connected; to correct this, a larger size of horizontal pipe should be used.

All joints on horizontal pipes should be sealed and access for inspection and cleaning should be provided [see 7.5]. Where fixed internally, they should be pressure tested.

NE.2.9 Vertical surfaces

Provision should be made to intercept or divert the runoff from a vertical surface at points where it would cause damage or inconvenience, such as at an entrance to a building. On tall and highly exposed buildings, consideration should also be given to the provision of garlands (i.e. gutters placed part way down the wall). See also NC.4.

NE.2.10 Flat roofs [see 5.4]

NE.2.10.1 *General.* Flat roofs should be designed to avoid ponding because it is difficult to maintain watertightness of a flat roof under these conditions.

NE.2.10.2 *Layout.* Flat roofs may be drained either:

a) towards the outer edges of the roof, or;

b) towards channels or outlets within the perimeter of the roof.

In both cases falls should be provided either by the construction of the roof or by screeding.

In general, an economic design will include few outlets but the number needed may often be determined by the plan shape of the roof rather than by the area drained.

NE.2.10.3 *Depth of water on roof.* The depth of water that can be allowed upon a flat roof during a storm depends upon its design strength, method of construction and height of upstands.

Traditionally, on roofs laid to falls, water depths of up to 35 mm around outlets have been acceptable.

NE.2.10.4 *Discharge at edge of roof.* Runoff from a flat roof may be discharged into:

(a) an eaves gutter (see Figure NE.4 a)), or;
(b) a chute connected to a hopper head (see Figure NE.4b)).

The entrance to the chute acts as a weir and the width that is needed can be calculated using Figure 12. If a sump is formed in front of the chute, it is possible to make *h* greater than the maximum depth of water allowed on the roof.

NE.2.10.5 *Discharge within perimeter of roof.* Runoff from a flat roof may discharge to:

a) a channel formed within or by the roof (see Figure NE.4d), or;
b) a sump containing an outlet, or;
c) an outlet draining the roof directly (see Figure NE.4c)).

Roof channels and their outlets should be designed as valley gutters. Sumps and roof outlets normally act as weirs and should be designed to limit the depth of water on the roof. The depth of sump is determined by the capacity of the outlet that drains it and should be not less than h + 25 mm.

NE.2.10.6 *Design of sumps.* The procedure given in a) to f) below may be used to determine the recommended dimensions of sump.

a) Locate the position of the sump and calculate the effective catchment area that it drains. Where possible, the sump should be placed centrally.

b) Choose the design rate of rainfall (see national annex NB) and calculate the total rate of runoff, Q, (in l/s) assuming that the roof is impermeable.

c) Select the design depth of water on the roof and use Figure 12 to calculate the perimeter of the sump, which may be taken as the length of weir, L_w, needed for Q.

d) Using Table 7, select a suitable outlet to drain the sump and calculate the head of water, h, in the sump.

e) The depth of sump above the level of the outlet should be at least h + 25 mm.

f) Use Table 8 to calculate the minimum size of rainwater pipe.

NE.2.11 Warning pipes for non-siphonic systems

Internal rainwater pipes should be able to withstand the head of water likely to occur due to blockage, but, in order to indicate that the pipe is in danger of being charged up to roof level, warning pipes should be provided at a height of not more than 6 m above the point where blocking is likely, e.g. at the bottom of stacks and at changes in direction. Warning pipes should be not less than DN 20 and should take an upward direction from the stack and discharge in a visible position.

NE.3 Inspection

Work should be visually inspected during installation to check compliance with the specification and design. On completion of the installation, all rainwater pipes should be checked to ensure that no obstructions are present.

NE.4 Testing

NE.4.1 General

All work that is to be concealed should be tested before it is finally enclosed. Tests for soundness should be applied to all internal pipework and it is recommended that long low gradient runs should be similarly tested. The internal rainwater pipes should be tested with water to whatever pressure is likely to be exerted within the pipe should a blockage occur.

NE.4.2 Air test for internal rainwater pipes

Internal rainwater pipes should be capable of withstanding a constant air pressure of 38 mm water gauge for a period of 3 min.

The open ends of pipe to be tested should be fitted with plugs suitable for withstanding the test pressure. One of the plugs should be fitted with a tee-piece of which one branch should be connected by means of a flexible tube to a manometer.

To apply the test, air should be pumped or blown through the other branch of the tee piece until the recommended pressure is indicated on the manometer scale.

NE.4.3 Water test for gutters

All gutters over walls and internal areas should be tested for leakage, after the gutter outlet has been plugged, by filling the gutter with water to the overflow level, if any, or otherwise to the lower level of the freeboard. After 5 min the gutter should be checked visually for evidence of leaks.

NE.5 Maintenance

NE.5.1 Periodic inspection and cleaning

Gutters, rainwater pipes, outlets and gratings should be inspected and thoroughly cleaned once a year, or more often if the building is in or near an industrial area or is near to trees or may be subjected to extremes of temperature.

The frequency of inspection and cleaning will need to be based on local experience.

Defects should be remedied as soon as possible after being noted.

NE.5.2 Painting

All ferrous metals should be protected against corrosion, and if not supplied with an adequate protective coating, should be painted. It is important that the internal surfaces of ferrous gutters are painted.

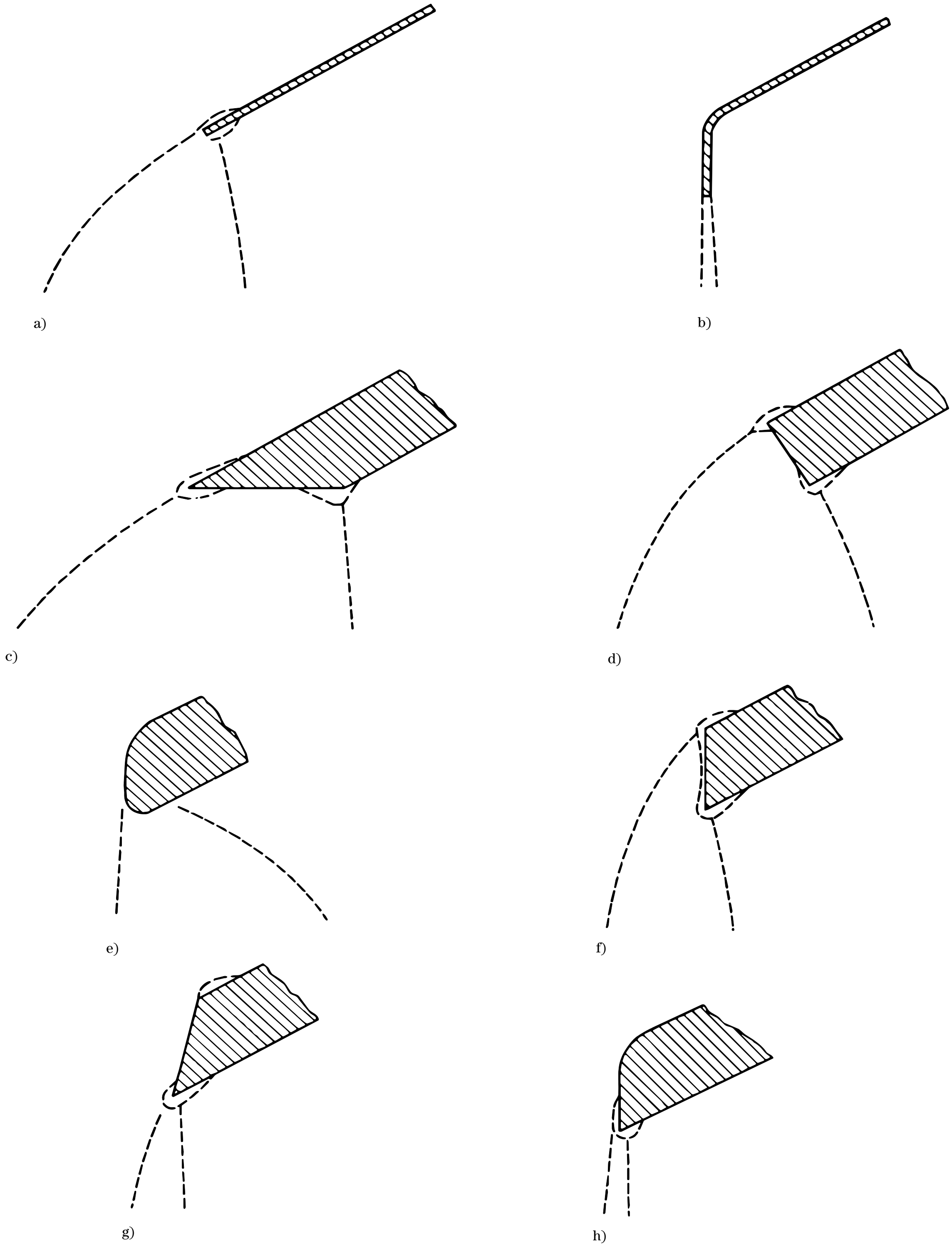

Spread of water is shown by broken lines

Figure NE.1 — Flow patterns at various roof edges

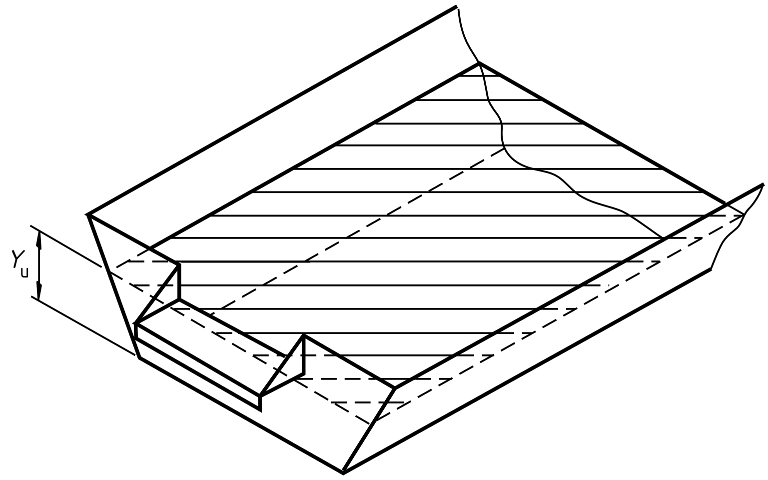

Y_u is the upstream depth of flow

Figure NE.2 — Weir overflow at upstream end of gutter

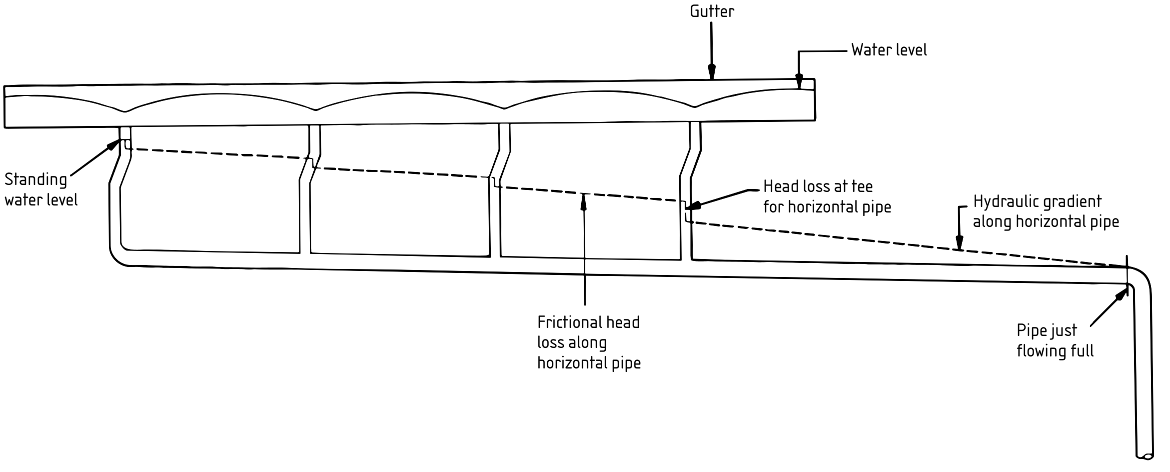

Figure NE.3 — Method for ascertaining standing water level in horizontal pipe

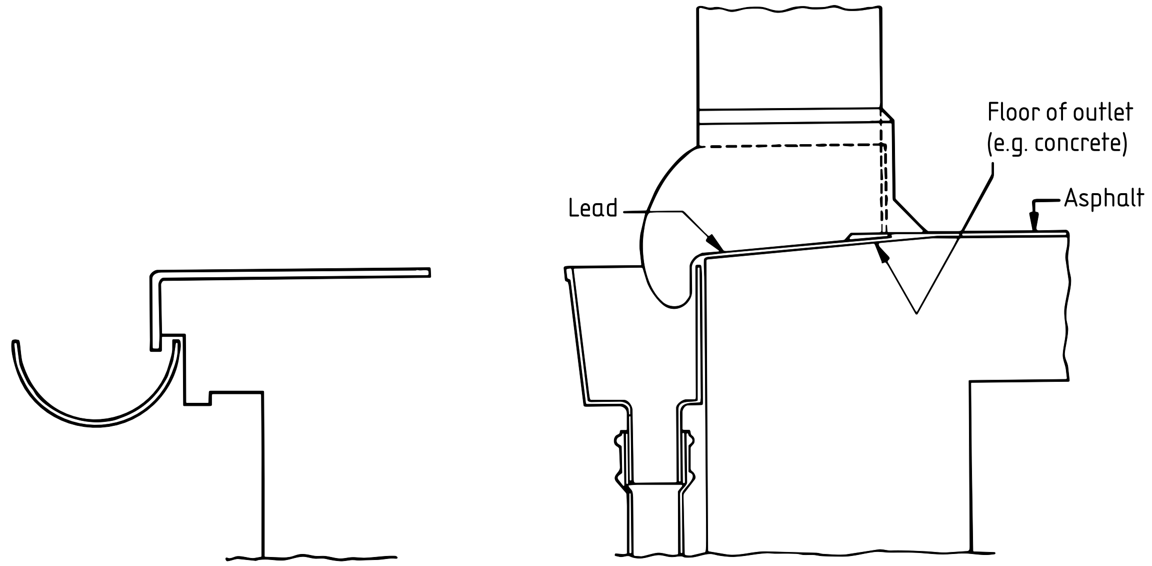

a) Eaves gutter

b) Chute into hopper head

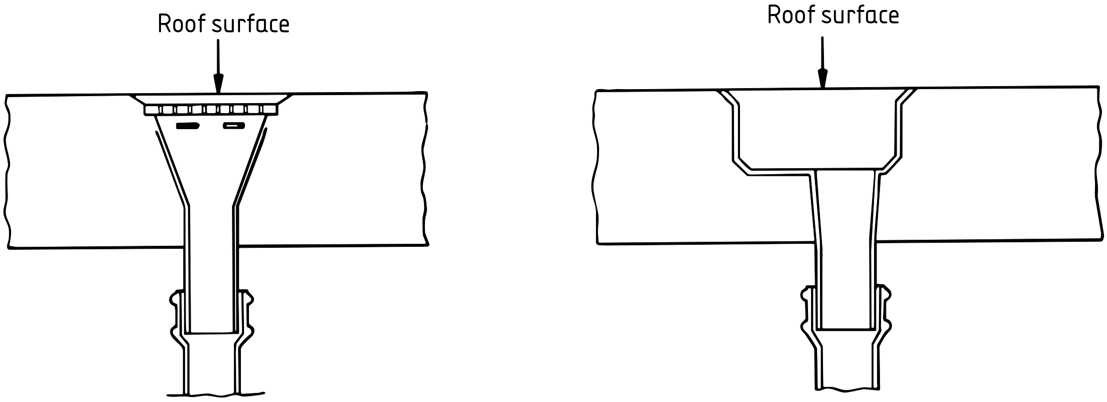

c) Vertical pipe with bellmouth and grating

d) Vertical pipe either from channel or box-receiver

Figure NE.4 — Drainage of flat roofs: types of outlet

NATIONAL ANNEX NF (INFORMATIVE)

TESTING OF SIPHONIC OUTLETS

NF.1 General

This annex gives a test method for testing siphonic outlets and complements the test method given in Annex A for testing non-siphonic outlets.

This test is appropriate for outlets that are installed in gutters or flat roofs and that are used as inlets to pipework systems that are designed to act siphonically. The test has three purposes:

a) to determine the relationship between the flow rate entering the outlet and the depth of water in the gutter or on the flat roof at the approach to the outlet;

b) to determine the head loss coefficient for the outlet for use in the hydraulic design of siphonic systems in which such outlets are installed;

c) to check the effectiveness of the outlet at preventing entry of air and the speed of response to changes in flow rate.

The relationship between upstream water depth and flow rate depends on where the outlet is installed. For a given rate of flow, the depth will be less on a flat roof than in a gutter; the narrower the gutter, the greater will be the flow depth. Therefore the test layouts (see NF.2.a)) should include the most critical conditions in which the outlet will be used. The test does not cover the performance and flow capacity of the siphonic pipework; this varies from system to system depending on the particular geometry and pipe characteristics of each design.

NF.2 Test method

a) Install the outlet centrally in a tank containing a section of horizontal floor that is level with the lip of the outlet and does not deviate from the horizontal plane by more than ±3 mm. The total area of the water surface in the tank during a test should not be greater than 20m^2 (recommended for item h) below).

b) For simulating conditions on a flat roof, the horizontal floor may be either square or circular, with overall dimensions not less than 2.0 m. For a circular floor, the flow should be introduced smoothly around the perimeter; for a square floor, the flow should be introduced smoothly on two opposite sides or around all four sides.

c) For simulating conditions in gutters, the horizontal floor should be either rectangular or square, with the width of flow restricted so as to represent the required cross-sectional shape of gutter. The overall length of the floor parallel with the centre-line of the gutter should not be less than 2.0m. Facilities should be provided for introducing the flow smoothly either at one end or at both ends of the gutter. When tested with flow from one direction, the horizontal distance between the centre of the outlet and the vertical end of the gutter should be equal to the diameter of the external strainer.

d) The outlet should be connected to a tailpipe that discharges into a horizontal collector pipe of length not less than 2.0 m, which in turn connects to a length of vertical pipe discharging into an open tank of water. All pipe joints should be air tight. The tailpipe should be of constant nominal diameter and include a transparent section for observation of flow conditions and any air entrainment. Separate tests should be carried out with the largest and smallest diameters of tailpipe that are used in site installations. The vertical length of the tailpipe should be the minimum used with each pipe diameter in site installations; the horizontal length of tailpipe connecting to the collector pipe should not be less than 2.0 m. The dimensions and lengths of the collector pipe and the vertical discharge pipe should be chosen so as to enable the outlet to discharge the maximum required rate of flow. A valve may be installed near the downstream end of the system so that it can be enabled to flow full at all discharge rates.

e) Steady flow tests should be carried out for each configuration at a minimum of five discharge rates covering the required range of operating conditions. The total flow rate should be measured to an accuracy of ±2%. Water depths should be measured to an accuracy of ±1 mm at a minimum of two points located 150 mm (±5 mm) from the lip of the outlet. When there is a flat roof, the measuring points should be on opposite sides of the outlet; when there is a gutter, the measuring points should be on the centre-line of the gutter and on opposite sides of the outlet. Each flow test should be continued until the flow rate and the water depths become constant; if the water depths fluctuate with time, the maximum depths occurring should be measured. The rating curve of the outlet should be defined by the maximum value of water depth that occurs at each flow rate. For outlets in gutters, separate rating curves should be obtained for flow from two directions and from one direction (see item c) above).

f) In each flow test, the average pressure occurring at a suitable point in the tailpipe should be measured by means of a piezometer in order to enable the head loss coefficient of the outlet to be calculated. The piezometer should be located in a section of straight pipe at a minimum distance of 10 pipe diameters downstream of the outlet or of a bend.

g) In each flow test, observations should be made of any swirling of flow at the outlet and any tendency for air to be drawn into the pipework.

h) A non-steady flow test should be carried out on each configuration by increasing the flow from zero to a maximum rate in a period of 15 s and then maintaining it constant at the maximum value for 5 min. The maximum water depth occurring during the test should be recorded. This depth should not be more than 5mm greater than the value obtained in the steady-state test at the same maximum flow rate.

BSI — British Standards Institution

BSI is the independent national body responsible for preparing British Standards. It presents the UK view on standards in Europe and at the international level. It is incorporated by Royal Charter.

Revisions

British Standards are updated by amendment or revision. Users of British Standards should make sure that they possess the latest amendments or editions.

It is the constant aim of BSI to improve the quality of our products and services. We would be grateful if anyone finding an inaccuracy or ambiguity while using this British Standard would inform the Secretary of the technical committee responsible, the identity of which can be found on the inside front cover. Tel: 020 8996 9000.
Fax: 020 8996 7400.

BSI offers members an individual updating service called PLUS which ensures that subscribers automatically receive the latest editions of standards.

Buying standards

Orders for all BSI, international and foreign standards publications should be addressed to Customer Services. Tel: 020 8996 9001. Fax: 020 8996 7001.

In response to orders for international standards, it is BSI policy to supply the BSI implementation of those that have been published as British Standards, unless otherwise requested.

Information on standards

BSI provides a wide range of information on national, European and international standards through its Library and its Technical Help to Exporters Service. Various BSI electronic information services are also available which give details on all its products and services. Contact the Information Centre. Tel: 020 8996 7111.
Fax: 020 8996 7048.

Subscribing members of BSI are kept up to date with standards developments and receive substantial discounts on the purchase price of standards. For details of these and other benefits contact Membership Administration. Tel: 020 8996 7002.
Fax: 020 8996 7001.

Copyright

BSI
389 Chiswick High Road
London
W4 4AL